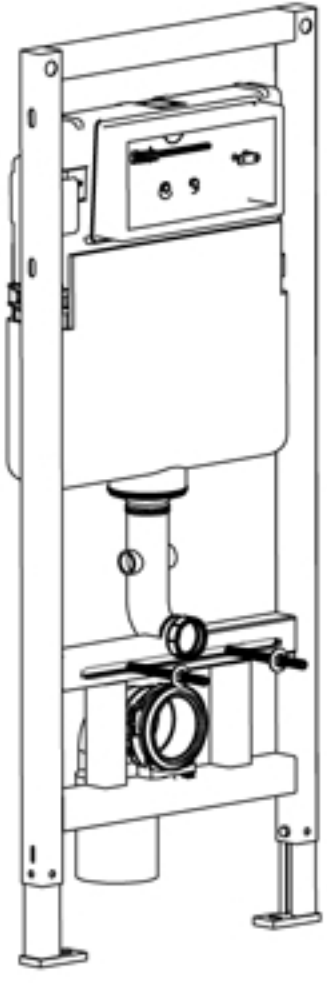

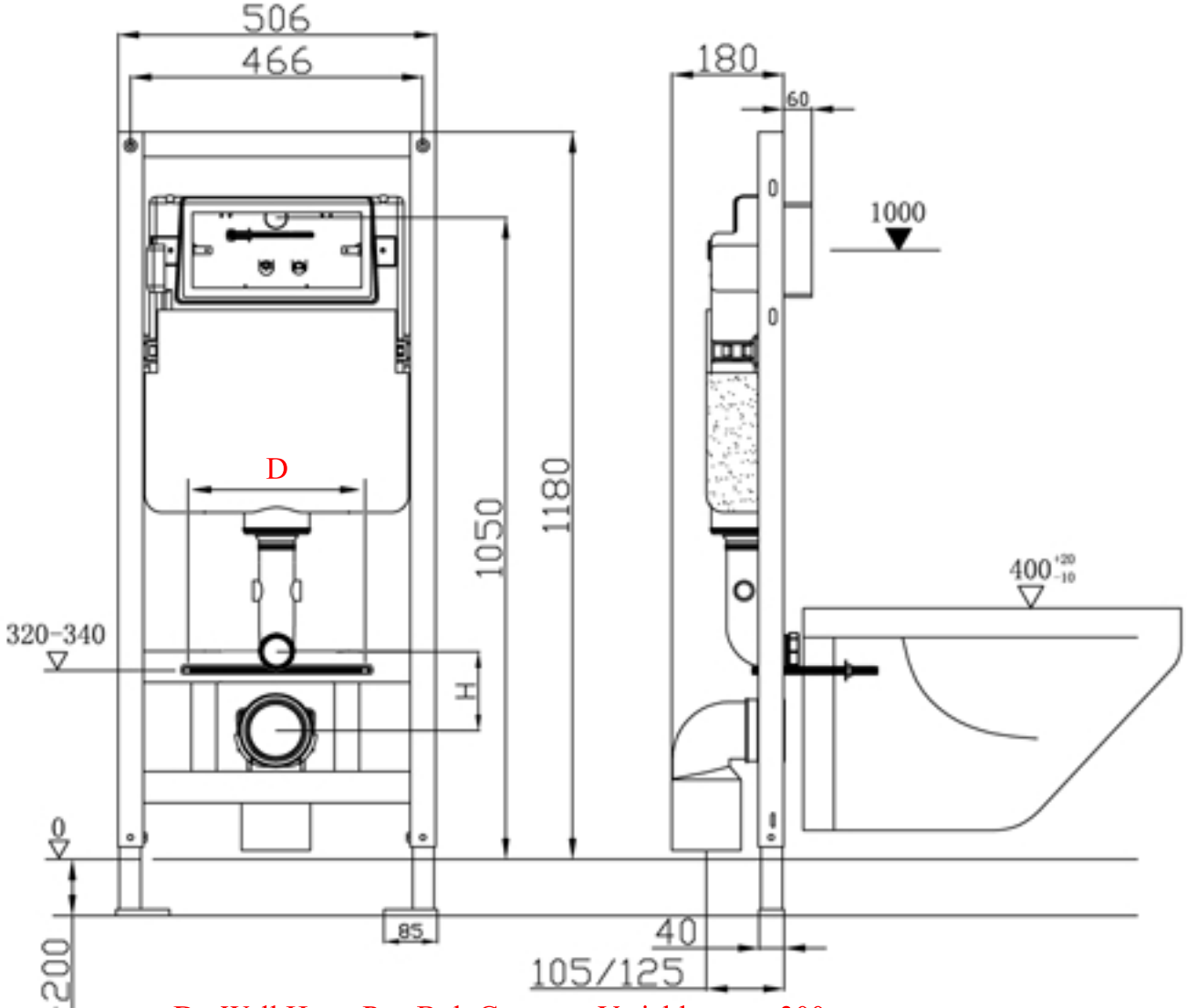

D= Wall Hung Pan Bolt Centres - Variable up to 300mm

H--according customer require