AQUALUX
BATHROOM DESIGN

GB Instruction Manual
NL Handleiding
DE Gebrauchsanweisung
FR Instruction de montage
DK Instruktionsvejledning
PL Instrukcja Obsługi

IN00600

AQUALOX
BATHROOM DESIGN

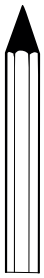
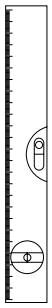
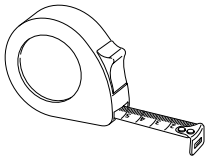

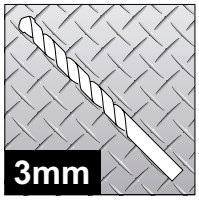

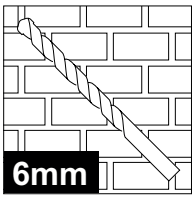

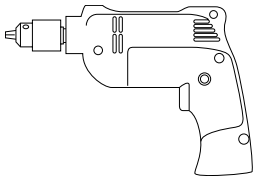
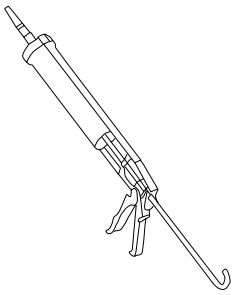
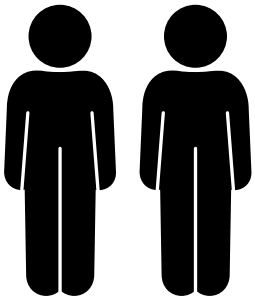

AQUALOX
BATHROOM DESIGN

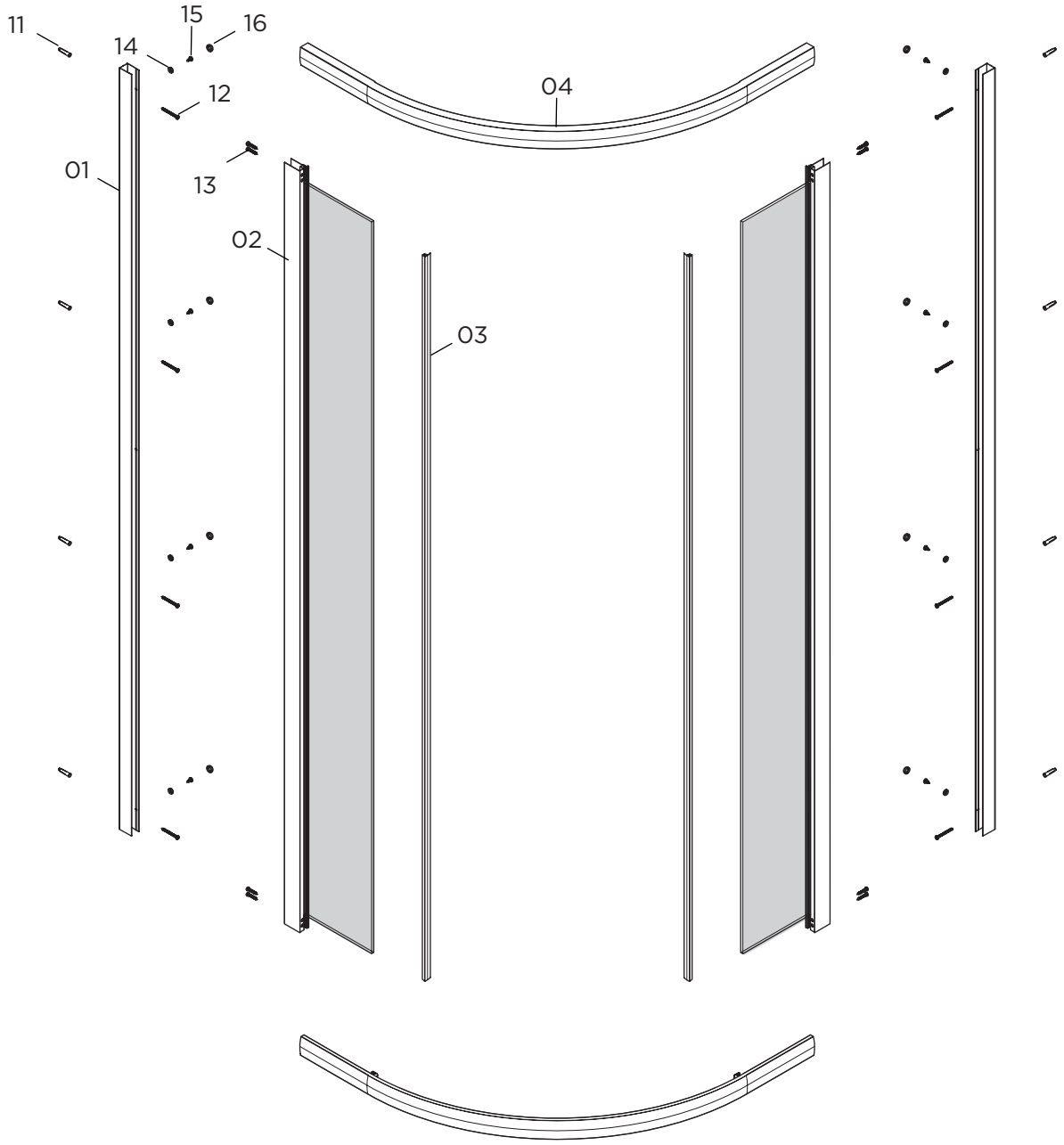

AQUALOX
BATHROOM DESIGN

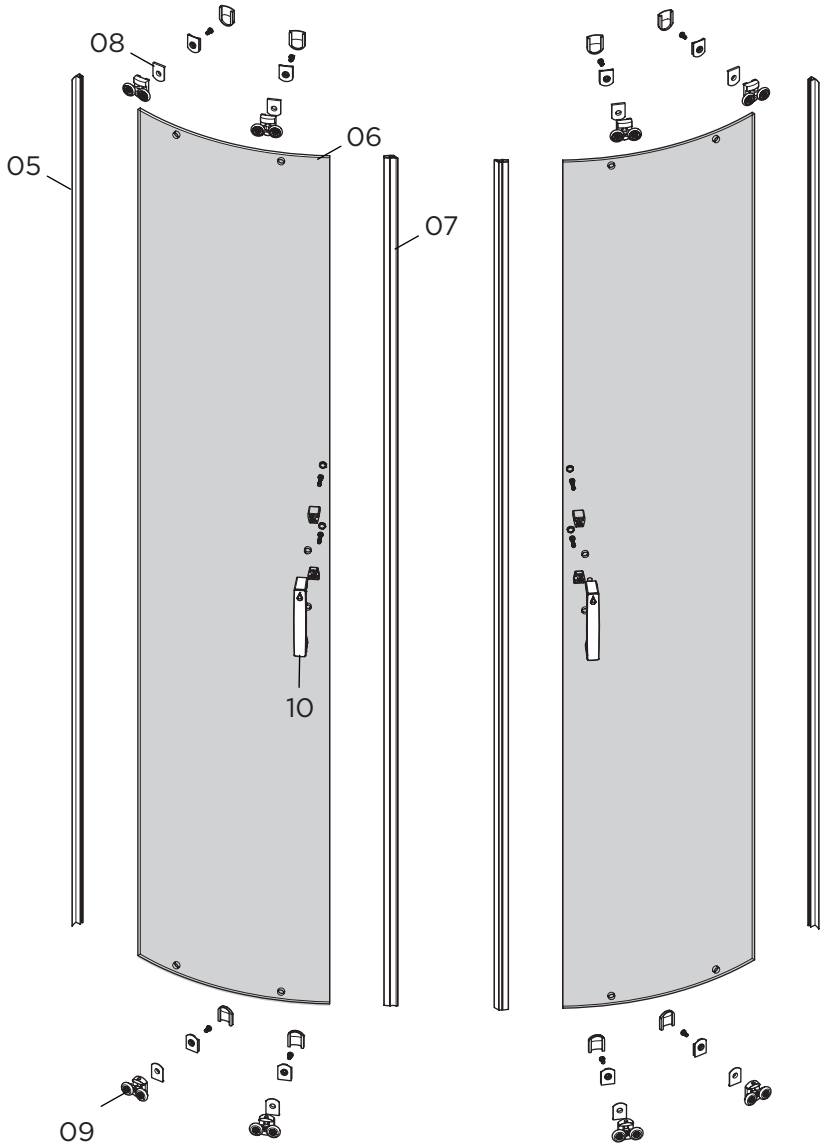

AQUALOX
BATHROOM DESIGN

[01] x2

[02] x2

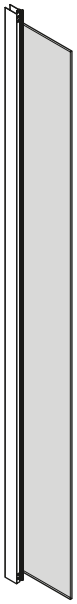

[03] x2

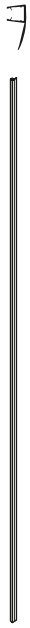

[04] x2

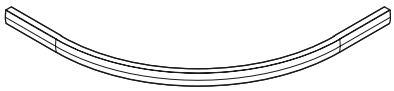

[05] x2

[06] x2

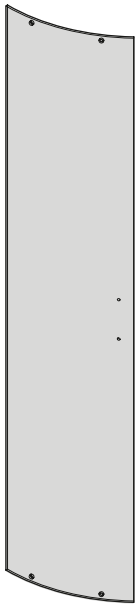

[07] x2

[08] x4

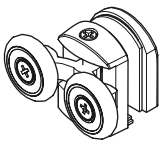

[09] x4

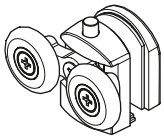

[10] x2

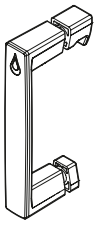

AQUALOX
BATHROOM DESIGN

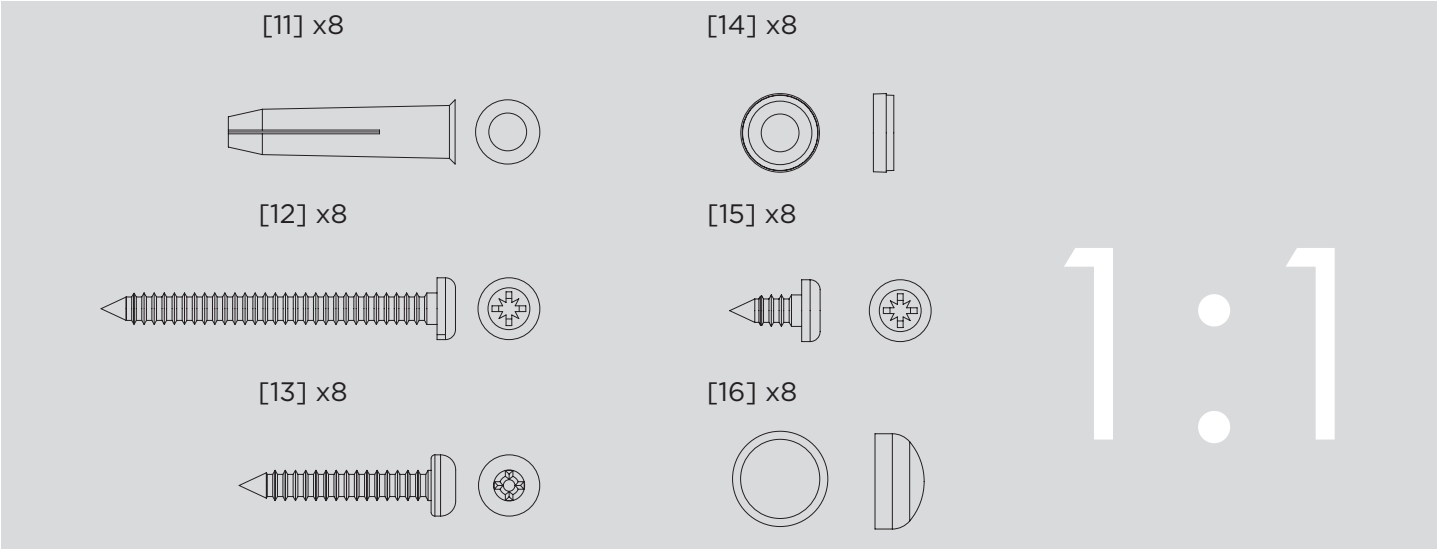

AQUALOX
BATHROOM DESIGN

GB Installation
NL Installatie
DE Installation
FR Installation
DK Installation
PL Instalacja

01

[04] x1

[02] x2

[13] x4

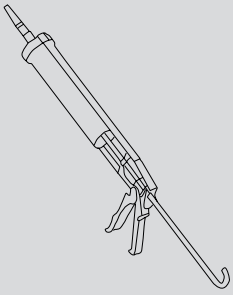

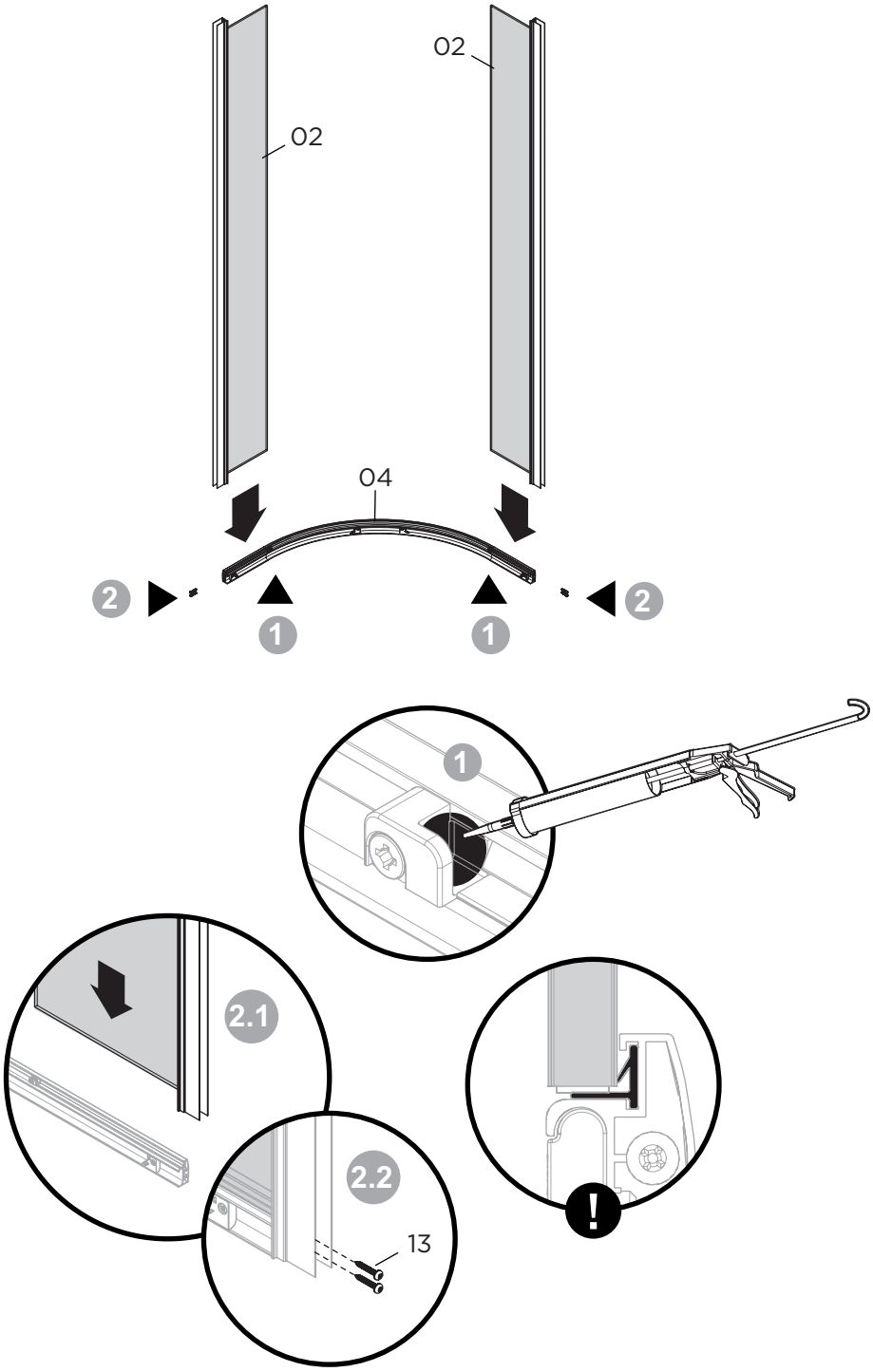

AQUALOX
BATHROOM DESIGN

02

[04] x1

[13] x4

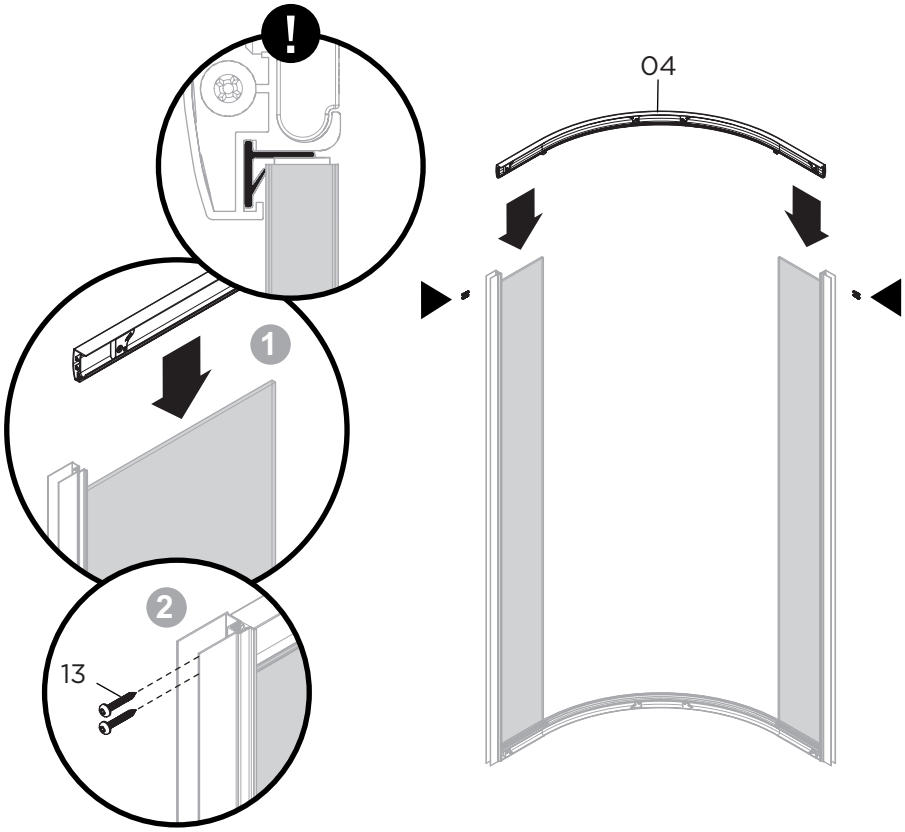

03

[03] x2

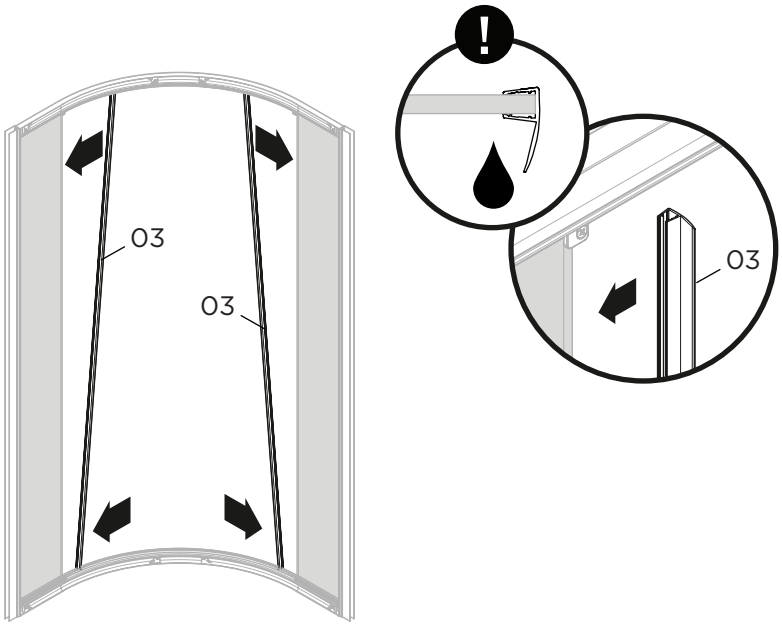

AQUALOX
BATHROOM DESIGN

04

[01] x2

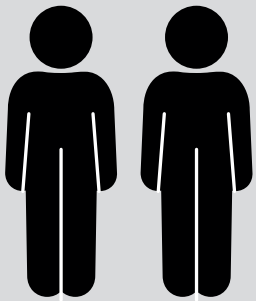

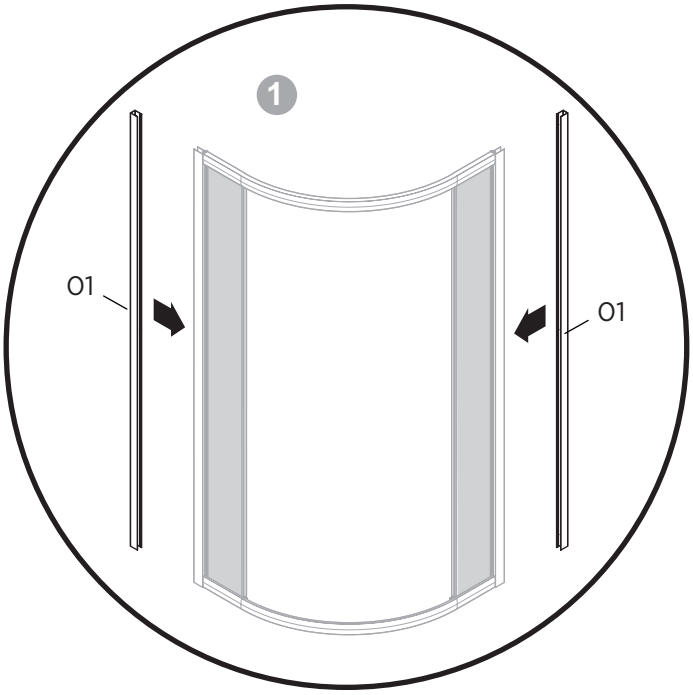

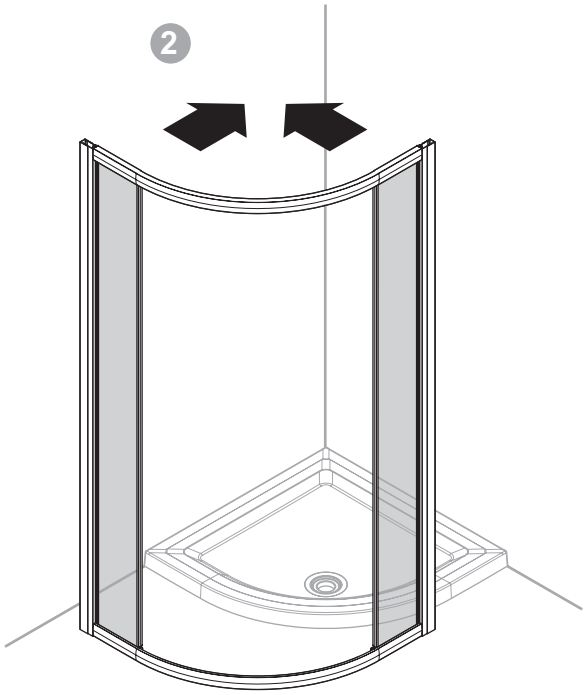

AQUALOX
BATHROOM DESIGN

05

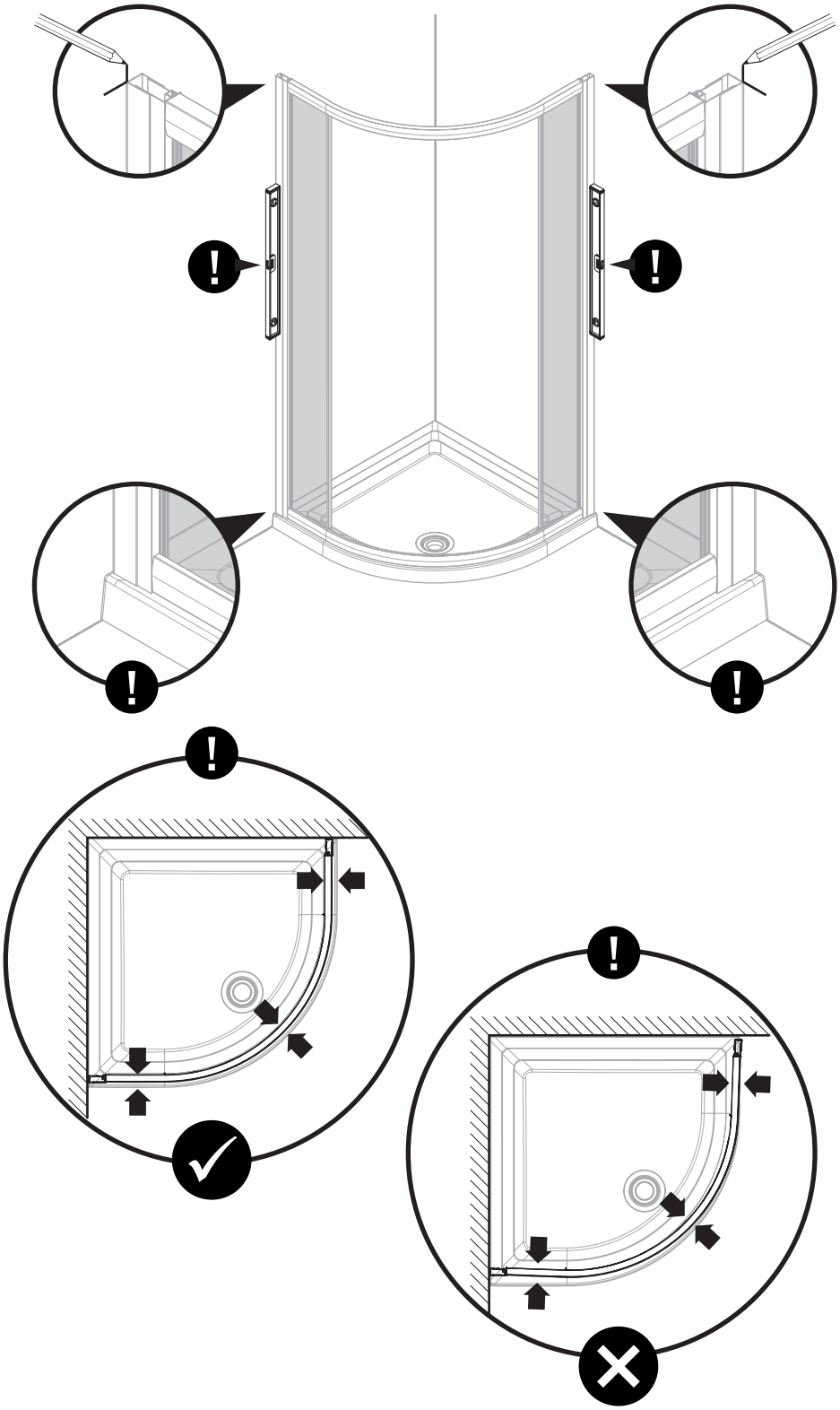

AQUALOX
BATHROOM DESIGN

06

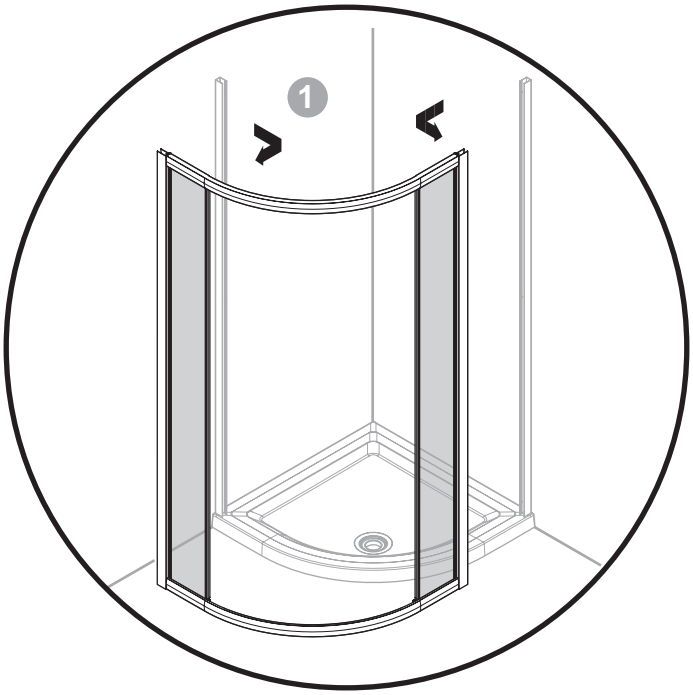

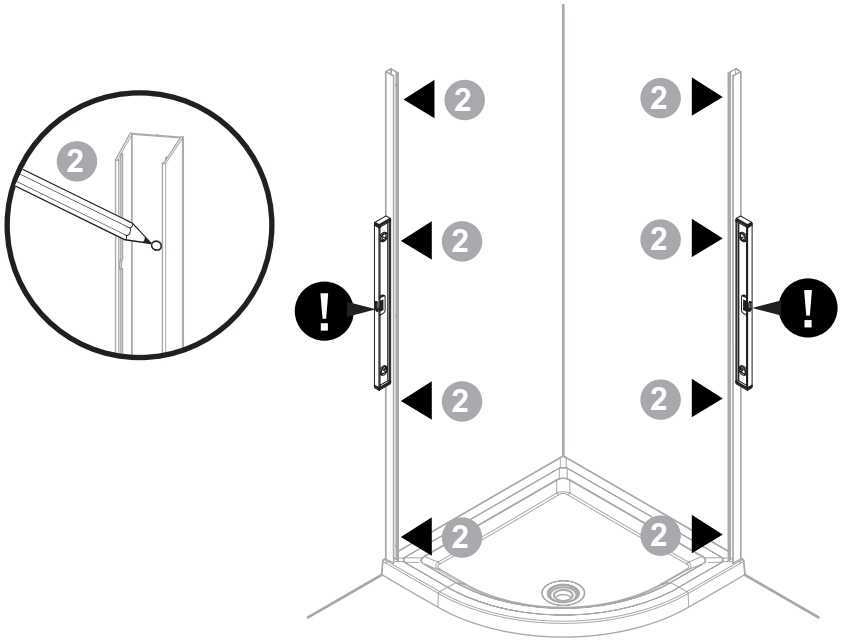

AQUALOX
BATHROOM DESIGN

07

[11] x8

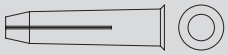

[12] x8

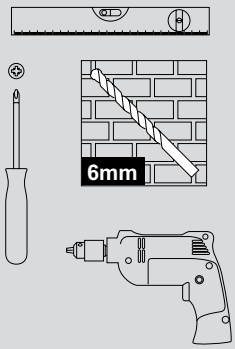

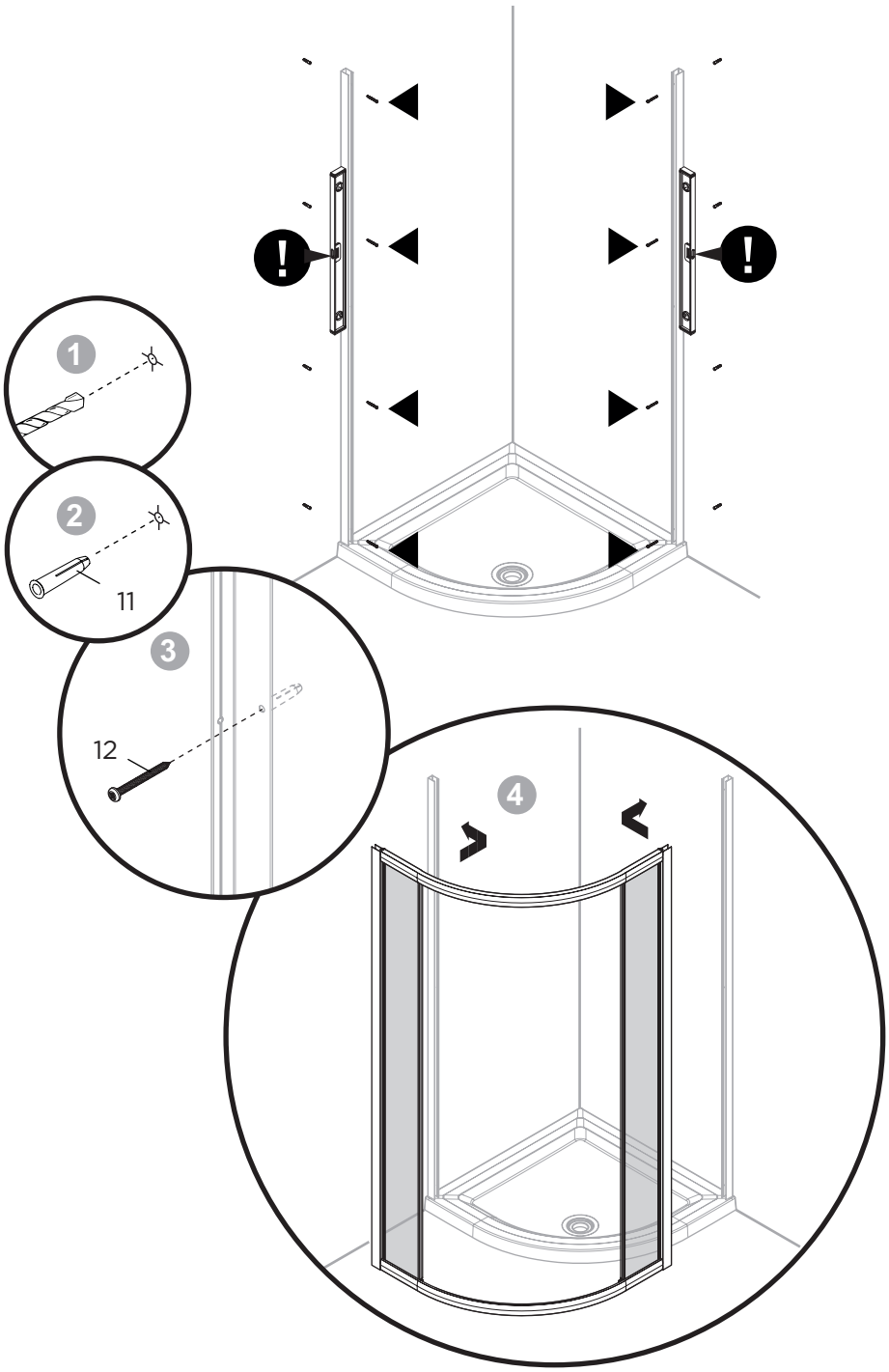

AQUALOX
BATHROOM DESIGN

08

[14] x8

[15] x8

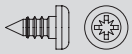

[16] x8

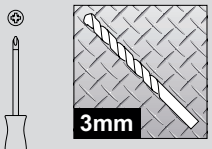

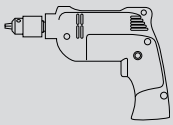

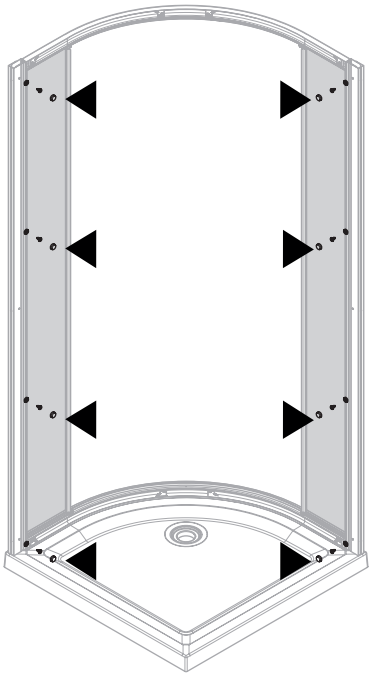

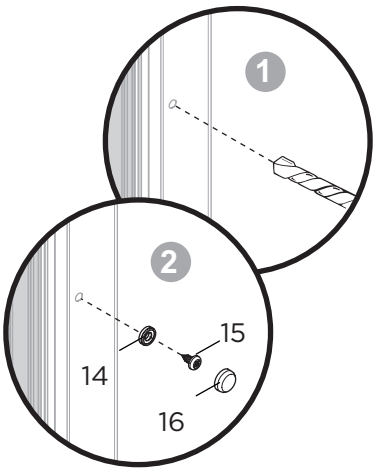

09

[06] x2

[08] x4

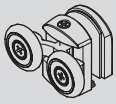

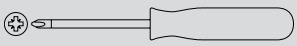

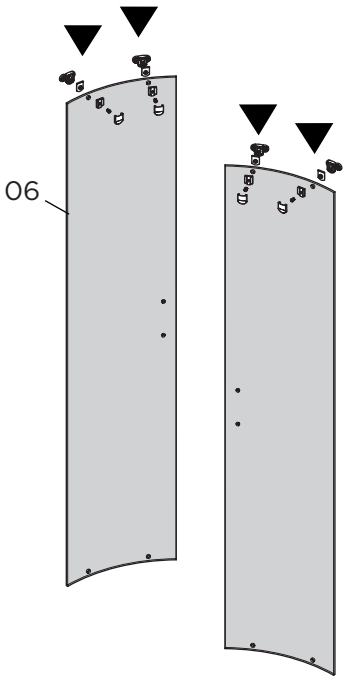

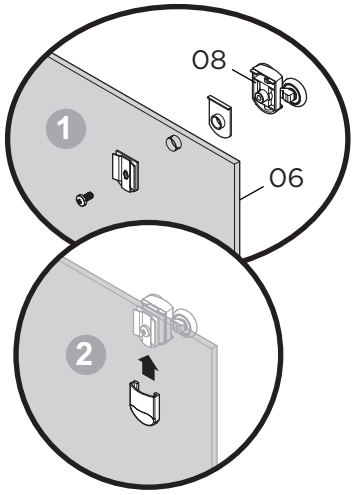

AQUALOX
BATHROOM DESIGN

10

[09] x4

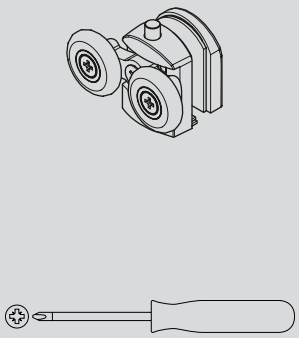

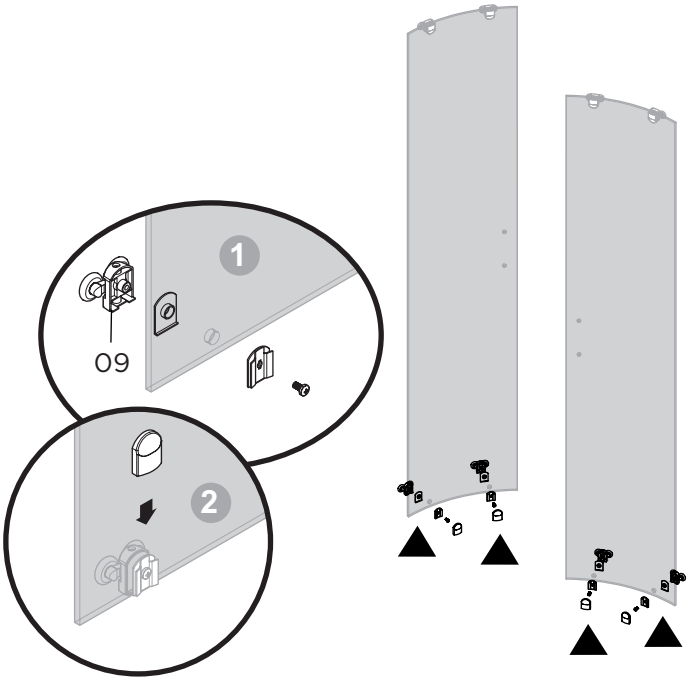

11

[10] x2

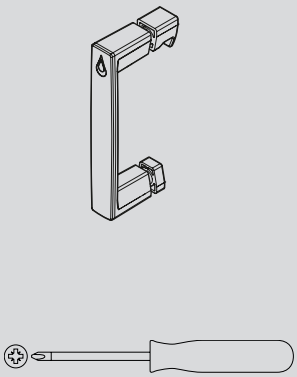

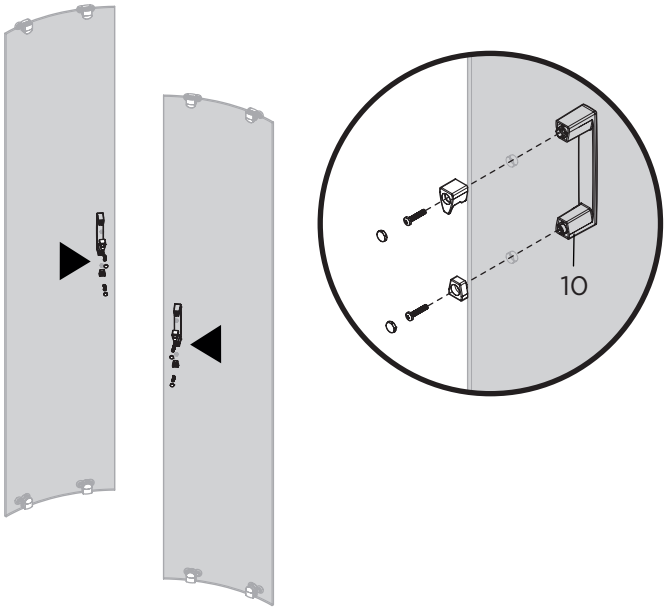

AQUALOX
BATHROOM DESIGN

12

[05] x2

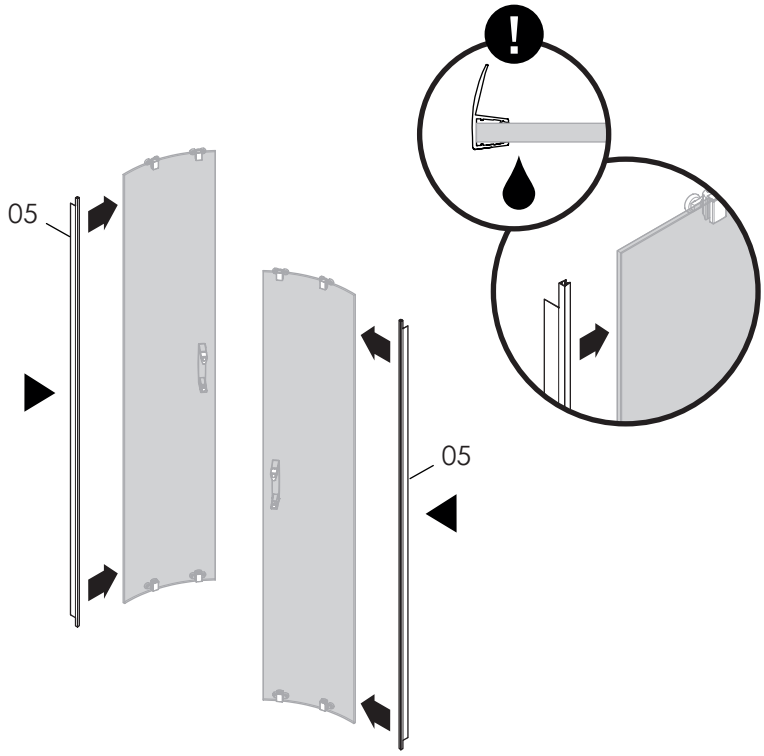

13

[07] x2

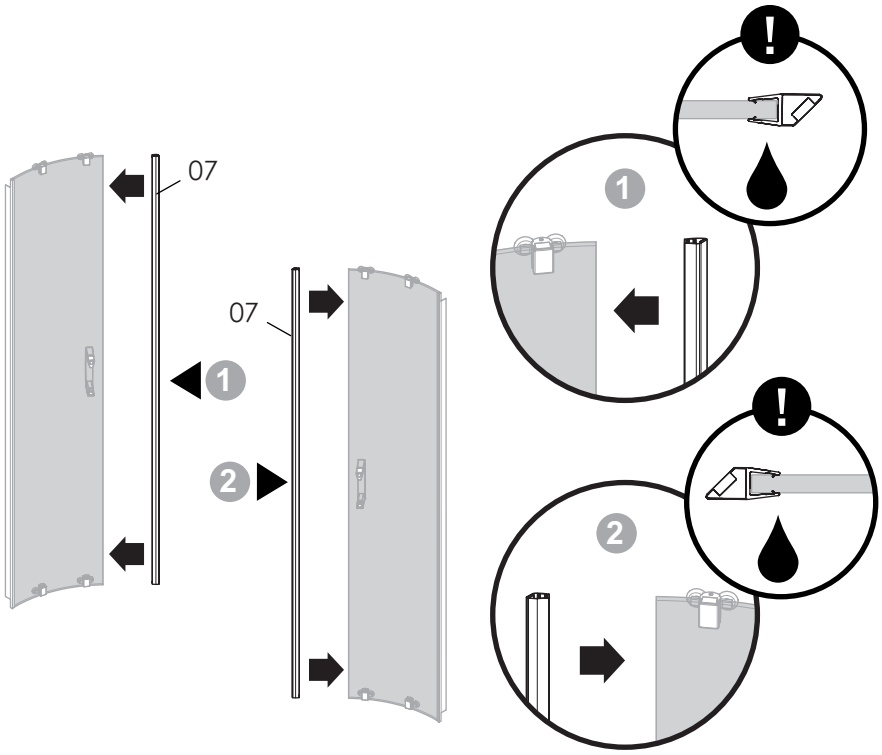

AQUALOX
BATHROOM DESIGN

14

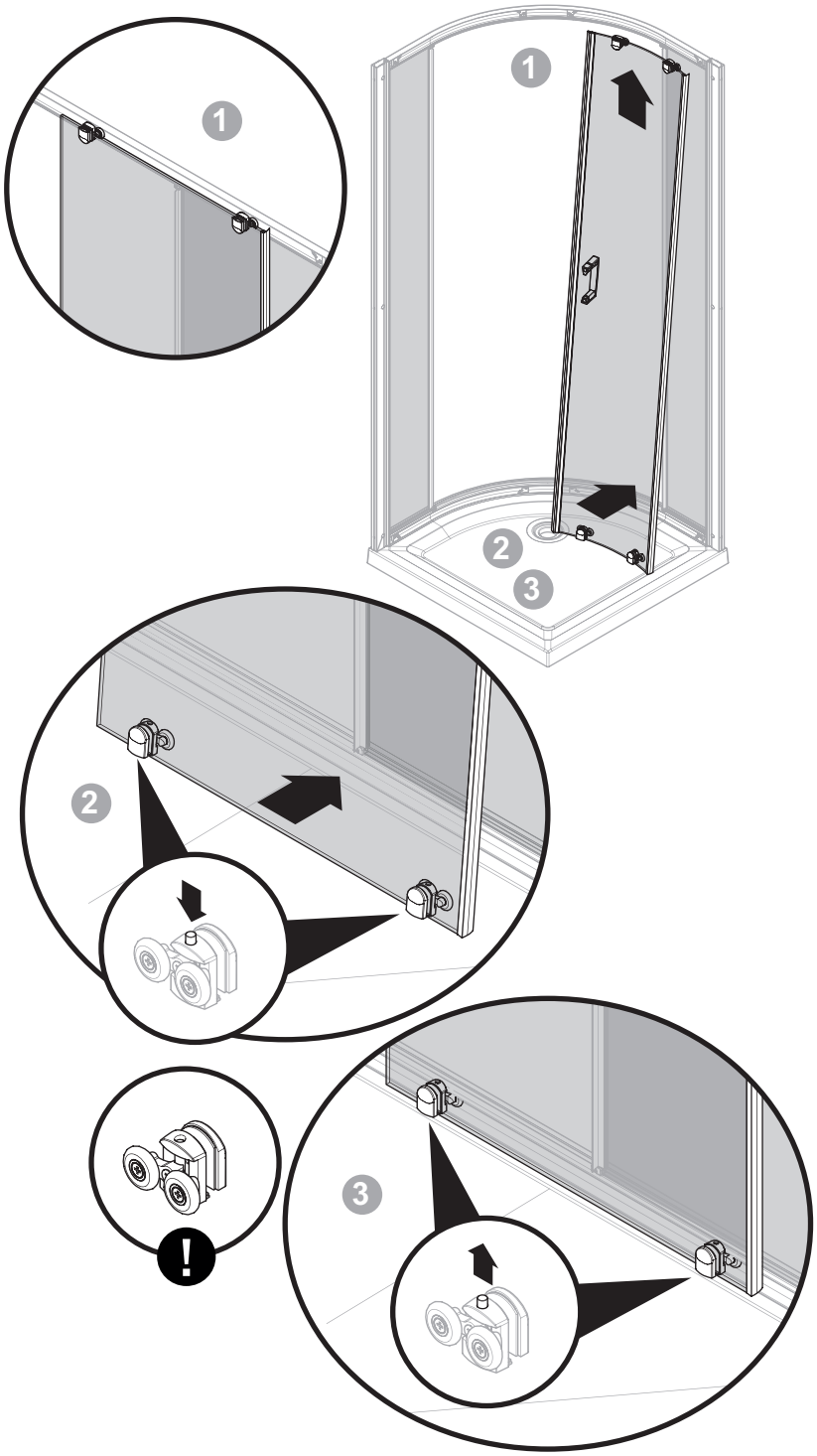

AQUALOX
BATHROOM DESIGN

15

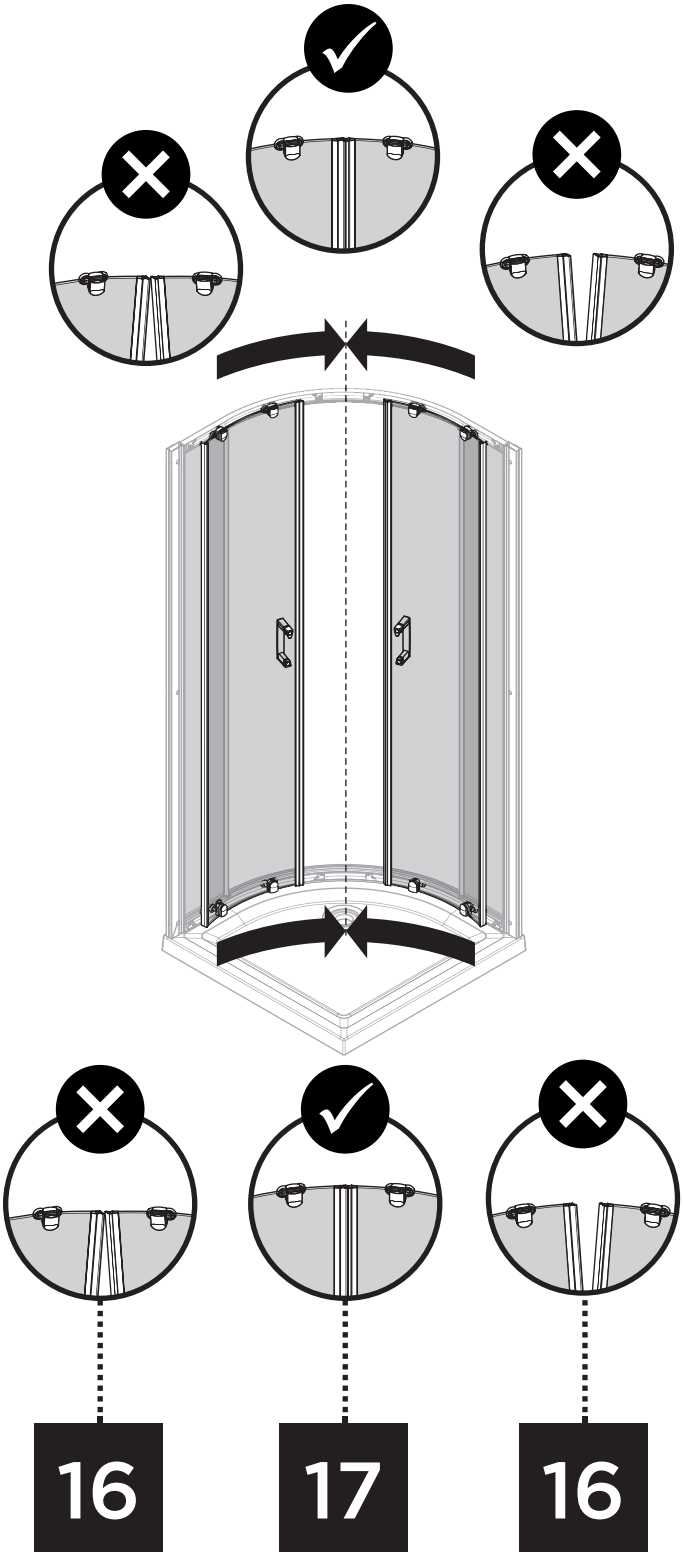

AQUALOX
BATHROOM DESIGN

16

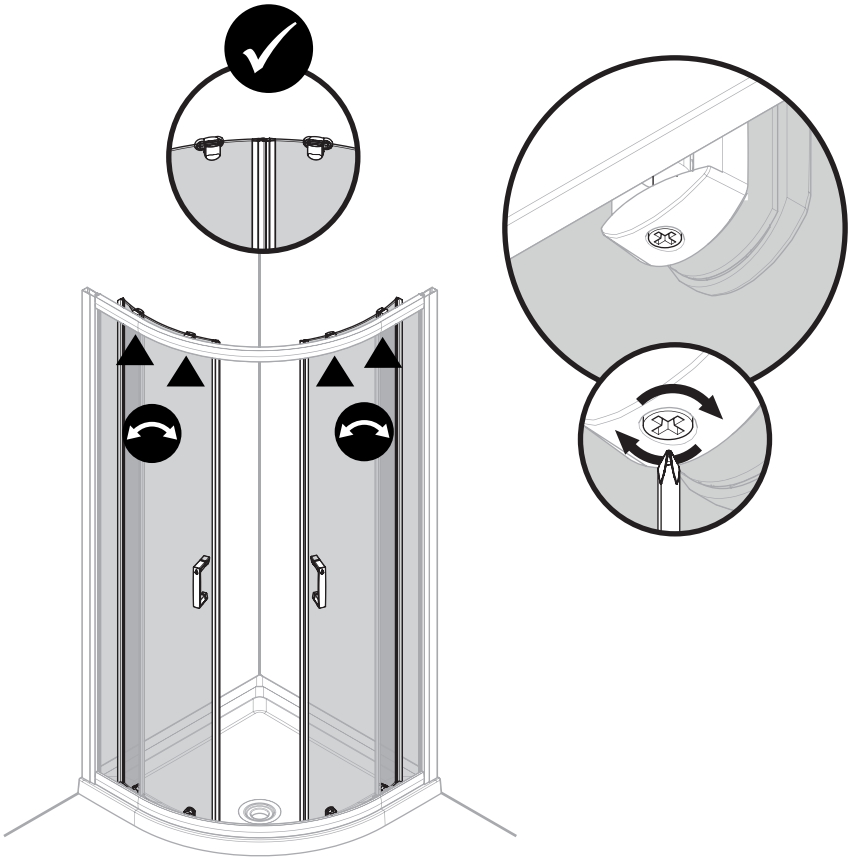

AQUALOX
BATHROOM DESIGN

17

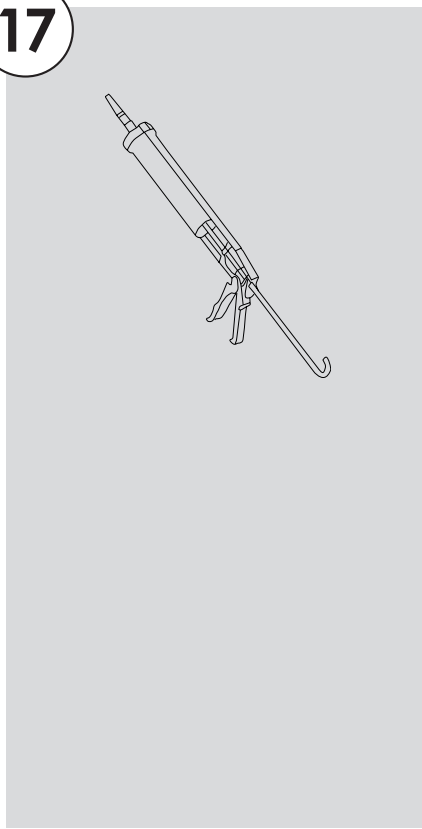

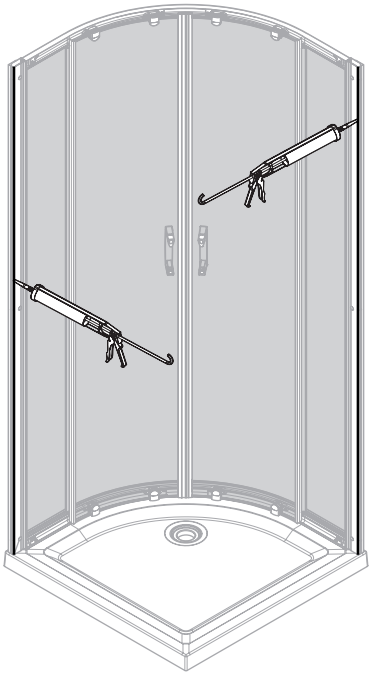

18

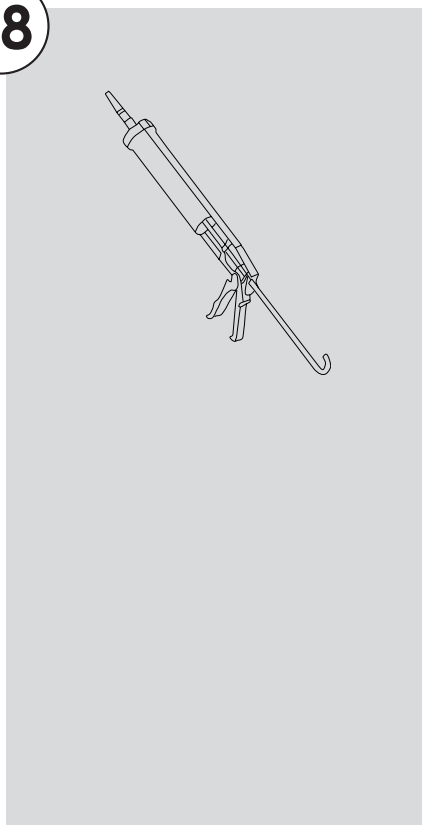

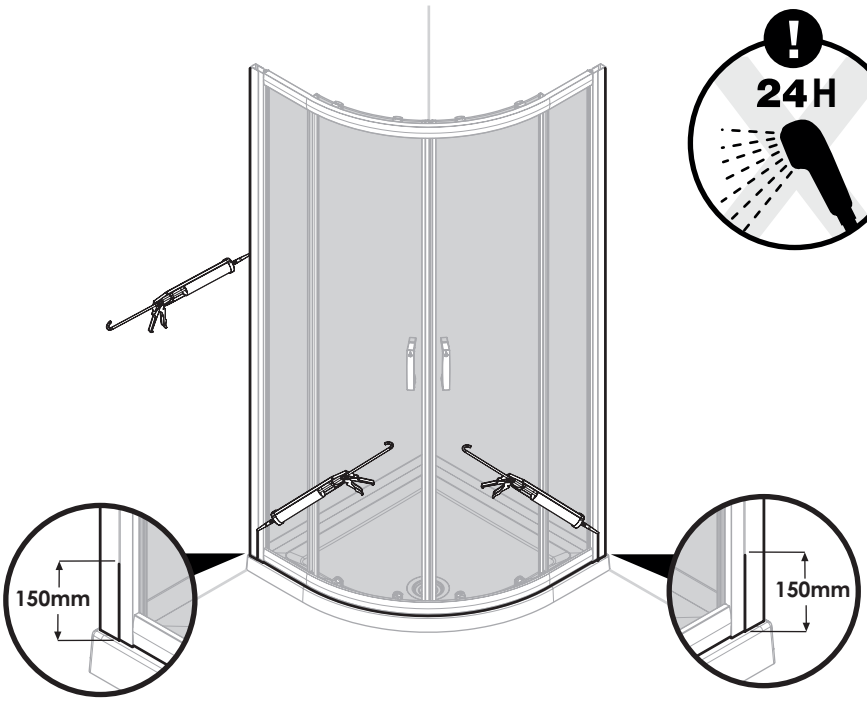

AQUALUX
BATHROOM DESIGN

refreshing *your* life every *day!*

Fetim Group United Kingdom
P.O. Box 16847
Solihull B90 9JE
United Kingdom

Fetim Group Nederland
P.O. Box 770
1000 AT Amsterdam
Nederland

Fetim Group Deutschland
Junkerstrasse 13-17
32257 Bünde
Deutschland

Fetim Group België
Rijvisschestraat 122
9052 Zwijnaarde (Gent)
België

Fetim Group Schweiz
Rütisbergstrasse 10
CH-8156 Oberhasli
Schweiz

Fetim Group Ibérica SLU
Isaac Newton, s/n
08430 La Roca del Vallès
Barcelona
España