Portman 21 Washbasin 40cm 1 Taphole, Overflow, No Chainstay

ILLUSTRATED

S2157	Portman 21 washbasin 40cm, 1 taphole with overflow, no chainstay hole
E0157	Wall fixing set
A6697	Contour 21+ 1 hole thermostatic basin mixer, single sequential lever with copper tails
S8722	Waste 1¼" brass strainer waste, 80mm slotted tail
S8920	Trap 1¼" plastic resealing bottle, 75mm seal, multi-purpose outlet

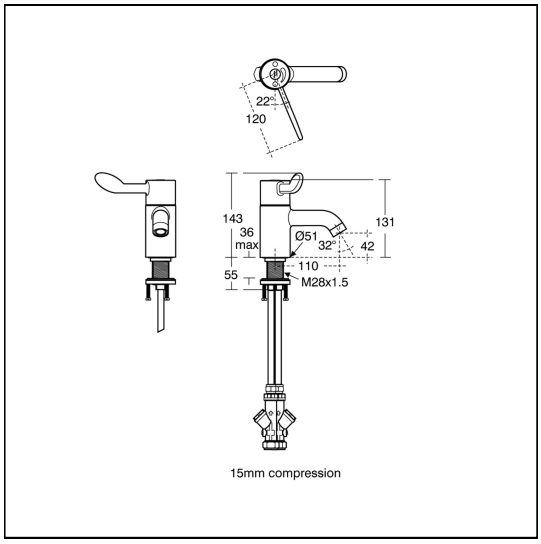

OPTIONS

E0062	Basin fixing set for IPS panels or block walls
B8263	Avon 21 washbasin mixer 1 hole, self closing push button, variable temperature control with 15mm female connector flexible hoses on inlets
B8260	Piccolo 21 washbasin 1 hole single lever mixer, no waste, 4.7 litres per minute laminar flow regulator, anti-vandal outlet, optional flow straightener, flexible tails
B8261	Piccolo 21 washbasin 1 hole single lever mixer with pop-up waste, 4.7 litres per minute laminar flow regulator, anti-vandal outlet, optional flow straightener, flexible tails
A6698	Contour 21+ 1 hole thermostatic basin mixer, single sequential lever with flexible tails
A6790	Contour 21+ Outline 1 hole thermostatic basin mixer, single sequential lever with flexible tails
S8733	Waste 1¼" brass anti theft swivel plug waste, 80mm slotted tail
S8800	Waste 1¼" plastic waste with bead chain and plug, 80mm slotted tail, bolt stay
S8900	Trap 1¼" metal bottle, 75mm seal, outlet screwed 1¼" BSP male with compression nut and ring
S9138	Bracket concealed with clamps and centre waste support for Portman 21, 40cm washbasins

ILLUSTRATED PRODUCT DETAILS

Sizes

S2157 w:400 x d:370

Weights

S2157	9.70 KG
E0157	0.16 KG
A6697	2.10 KG
S8722	0.22 KG
S8920	2.00 KG

Materials

S2157	Vitreous China
E0157	Metal
A6697	Chrome Plated Brass
S8722	Chrome Plated Metal
S8920	Plastic

Finishes

S2157	White (01)
E0157	Neutral / No Finish (67)
A6697	Chrome (AA)
S8722	Chrome (AA)
S8920	Neutral / No Finish (67)

Capacity

S2157 3.3 litres

Flow rates

A6697 3.9 Litres per minute @ 3 bar pressure

E: info@idealspec.co.uk | T: 0870 122 8822 | F: 0870 122 8282 | www.idealspec.co.uk

Ideal Standard (UK) Ltd. makes every effort to ensure that the information provided on its website is accurate. However, we cannot guarantee this, and accept no liability for any information or advice given via its website.

Date created: 01/08/2019

Portman 21 Washbasin 40cm 1 Taphole, Overflow, No Chainstay

Special Notes

S9138 Bracket for 40cm basins
Recommended fixing heights (floor to front rim);
Nursery use 600mm
Infant use 700mm
Junior use 750mm
Senior/adult use 780-800mm.
Washbasin wall mounted using E015767 wall fixing set or panel mounted using E006267 fixing set

Ideal Standard (UK) Ltd. makes every effort to ensure that the information provided on its website is accurate. However, we cannot guarantee this, and accept no liability for any information or advice given via its website.