Sensorflow 21 Tubular 23cm Panel Mounted Spout & Separate Sensor, Link

ILLUSTRATED

A4184 Sensorflow 21 tubular panel mounted 230mm projection spout with anti-splash 3.7 litre per minute aerated outlet, remote panel sensor, copper tube inlets, link

ILLUSTRATED PRODUCT DETAILS

Weights

A4184 3.20 KG

Materials

A4184 Chrome Plated Brass

Finishes

A4184 Chrome (AA)

Flow rates

A4184 3.7 Litres per minute @ 3 bar pressure

FINISH OPTIONS

(AA) Chrome

(GN) Ultra Steel

Special Notes

Designed to be supplied with pre-mixed water.
Consideration should be given to safe hot water delivery and the use of an appropriate temperature reduction device, please see A5900AA (for use with 15mm pipework) or A5901AA (for use with 22mm pipework). The proximity sensor should be positioned to work in the normal handwashing position. Must link to mains version A4183AA, alternatively a stand alone battery powered unit is available. Flow rate regulated at 3.7 Litres per minute at 1 bar.

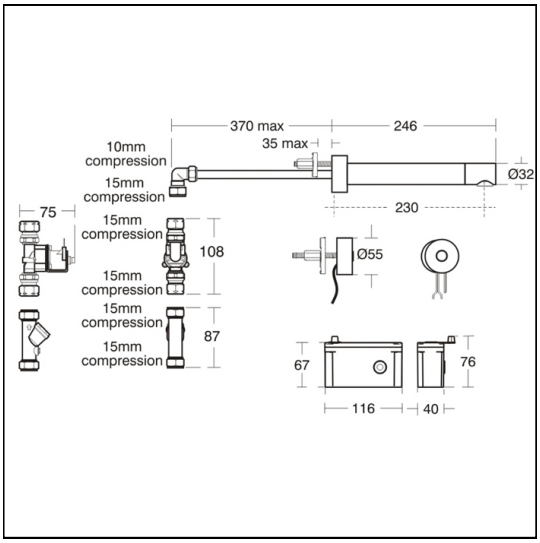

ACCREDITATIONS

WRAS APPROVED PRODUCT

FEATURES

Ideal Standard (UK) Ltd. makes every effort to ensure that the information provided on its website is accurate. However, we cannot guarantee this, and accept no liability for any information or advice given via its website.