Sales Code: BAYC238 **Barcode:** 5055275892701 **Brand:** Bayswater **Description:** Bayswater 3 Tap Hole 1200mm Double Bowl Grey Marble Top Basin



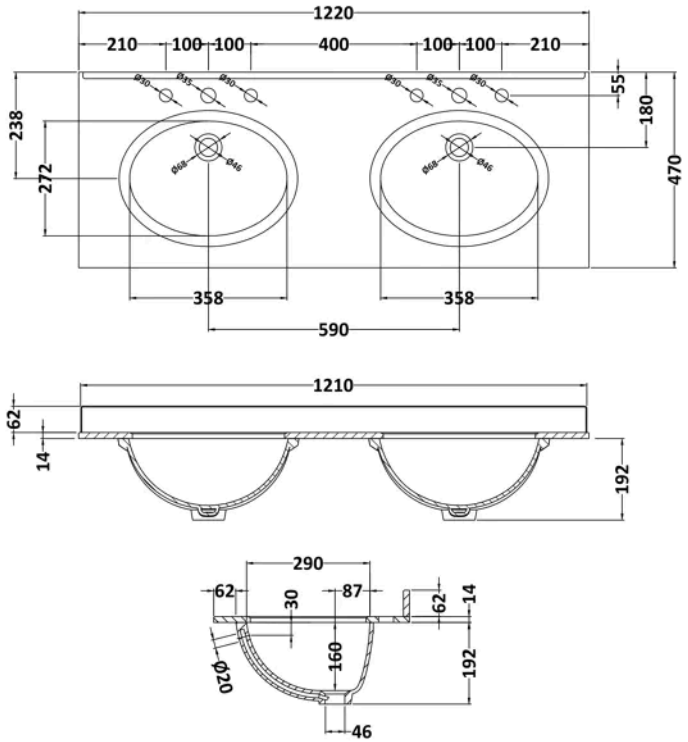

Product Dimensions

Product	268 x 1220 x 463mm (H x W x D)
Packaged	310 x 1300 x 550mm (H x W x D)
Nett Weight	27.5 kg
Packaged Weight	28 kg

Product Details

Country of Origin	China
Product Material	Vitreous China
Colour/Finish	Grey
Style	Traditional
Inner Bowl Height	160 mm
No. Of Tapholes	3
Number Of Bowls	2
Overflow Cover Included	No
Overflow Included	Yes
Tap Included	No
Waste Included	No

© ROXOR Group