Sales Code: BCM600NW **Barcode:** 5056462645070 **Brand:** BC Designs **Description:** 600mm Flat Mirror



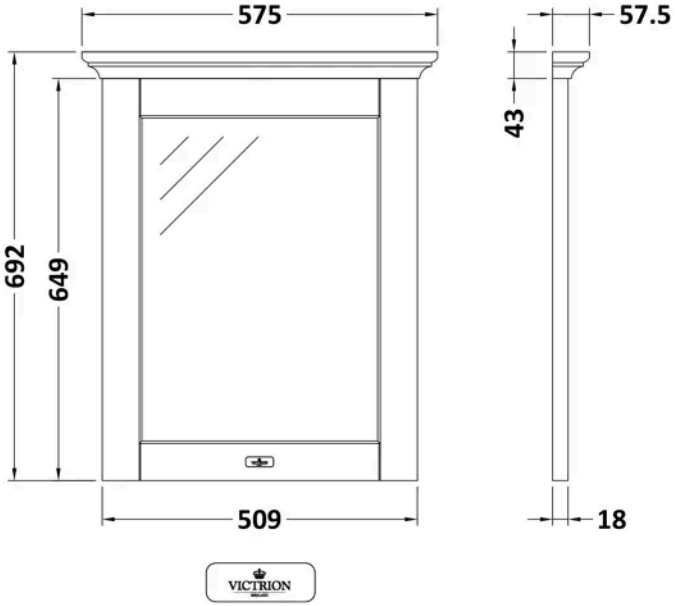

Product Dimensions

Product	692 x 575 x 58mm (H x W x D)
Packaged	724 x 615 x 90mm (H x W x D)
Nett Weight	5.3 kg
Packaged Weight	5.8 kg

Product Details

Country of Origin	Republic of Ireland
Product Material	Glass,Mdf Vinyl Textured Woodgrain
Colour/Finish	White
Mount Type	Wall Hung
Style	Traditional
Frame Finish	Woodgrain

© ROXOR Group