TECHNICAL DATA SHEET

CROSSHEAD
High Neck Pillar Taps

Product Specification

Product Code:	VAX HNK C
Finishes:	Chrome
Product Type:	Contemporary
Construction:	Tap bodies are of all brass construction
Valve Type:	½" Standard valve
Supply:	Suitable for all plumbing systems, preferably balanced
Inlet Connections:	½" BSP
Water Pressure:	Min 0.2 bar, Max. 0.7 bar

Additional Information

- Supplied with metal heads
- Supplied with metal back nuts
- Chrome plated to BS EN 248

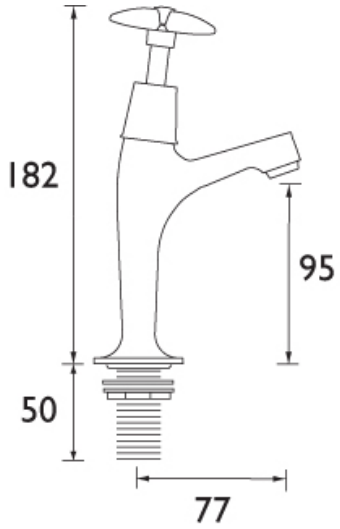

Flow Rates (litres per minute)

System Pressure	0.2bar	0.4bar	1.0bar	2.0bar	3.0bar	5.0bar
High Neck Sink Taps	13.6	19.6	31.0	43.5	53.2	68.7

Compliance/Approvals

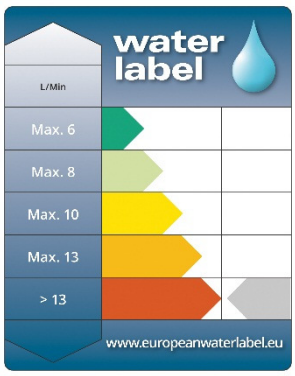

WRAS Approval No: 1405116

Technical Advice: For further information please call 0844 7016273 or email customercare@bristan.com

Guarantee: 5 years covering manufacturing faults.

Bristan, Birch Coppice Business Park, Dordon, Tamworth, B78 1SG
Telephone: 0844 701 6274 Facsimile: 0844 701 6275
Web Site: www.bristan.com Email: enquire@bristan.com

WRAS APPROVED PRODUCT

5 Year Guarantee

24 Hour Delivery

0844 7016273

The information contained on this page was correct at date of issue. Fitting dimensions are provided as a guide only. Some variation may occur due to manufacturing tolerances. Bristan pursues a policy of continuing improvement in design and performance of its products and so reserves the right to change specifications without prior notice.