COMP TSTACK1 C

Accessories
Towel Stacker Chrome



Specification	
Contemporary or Traditional:	Contemporary
Main Construction Material:	Brass
Connection Inlet:	N/A
Connection Outlet:	N/A
Product Weight (kg):	2.31
Adjustable Brackets:	N/A
What's in the Box?:	1 x Towel Rail, 4 x Wall Fittings, 8 x Screws, 8 x Rawl Plugs, 1 x Fitting Instructions

Features:

- Built to last with a solid brass construction for strength and durability
- Bring lasting shine to your space with a versatile, hard-wearing chrome finish
- Built to last, backed by a lifetime parts and 1-year labour guarantee
- Pair with coordinating taps and showers to complete the look

Product Certifications:

For more products, visit our website:
http://www.bristan.com

Dimensions (measurements in mm)

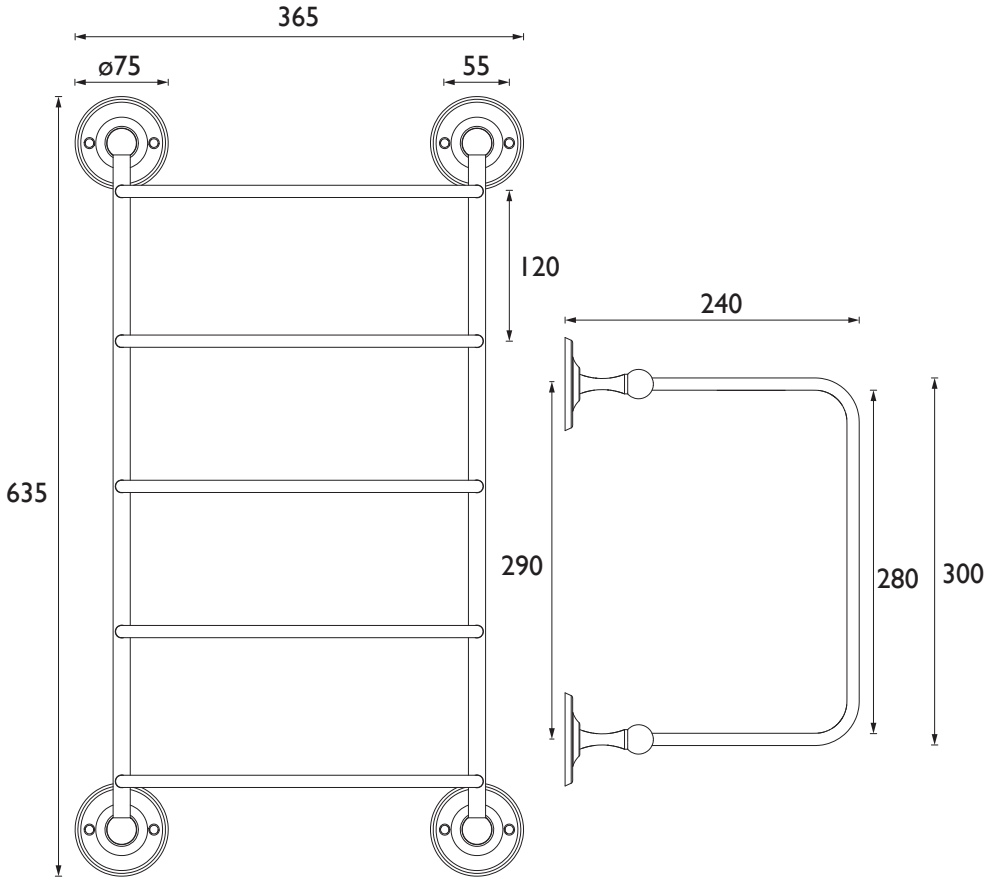

TECHNICAL DATA SHEET

LIFETIME GUARANTEE *

BRISTAN

D5

Bristan, Birch Coppice Business Park, Dordon, Tamworth, B78 1SG. Web Site: www.bristan.com Telephone: 0330 026 6273. Email: enquire@bristan.com.

* - **Lifetime guarantee applies to products purchased on or after 01/04/2026.** See www.bristan.com/guarantees for more information. The information contained on this page was correct at date of issue. Fitting Dimensions are provided as a guide only. Some variation may occur due to manufacturing tolerances. Bristan pursues a policy of continuous improvement in design and performance of its products and so reserves the right to change specifications without prior notice.