SAFFRON BB SHWR PK2

SAFFRON Shower Range
Saffron Concealed Dual Control Shower Pack2 Brushed Brass

Specification

Finish/Colour:	Brushed Brass
Main Construction Material:	Brass; ABS
No of Controls:	3
Shower Type:	Dual Control
Shower Head Type:	Both
Shower Kit:	Adjustable riser with Fixed Head
Valve/Cartridge Type:	40mm Diverter & 35mm Thermostatic Cartridge
Maximum Hot Water Supply Temperature °C:	65
Plumbing System Suitability:	Suitable for all plumbing systems, ideally balanced
Minimum Dynamic Pressure (bar):	0.2
Maximum Dynamic Pressure (bar):	5
Maximum Static Pressure (bar):	10
Connection Inlet:	15mm Compression
Connection Outlet:	G 1/2"
Isolation Valve Included:	No
Check Valve Included:	Yes

Features:

- Supplied with everything you need, including a shower valve with integral two outlet diverter, slimline 200mm round drench head with shower arm, a multi function handset and wall outlet
- Keep your shower performing like new with rub-clean nozzles that wipe clean easily
- Easy installation with an adjustable faceplate that fits total wall depths from 60mm to 75mm for a perfect flush finish
- Control your perfect shower experience with separate flow and temperature controls for precise adjustment
- Save time on maintenance with a front-access cartridge for quick servicing

Dimensions (measurements in mm)

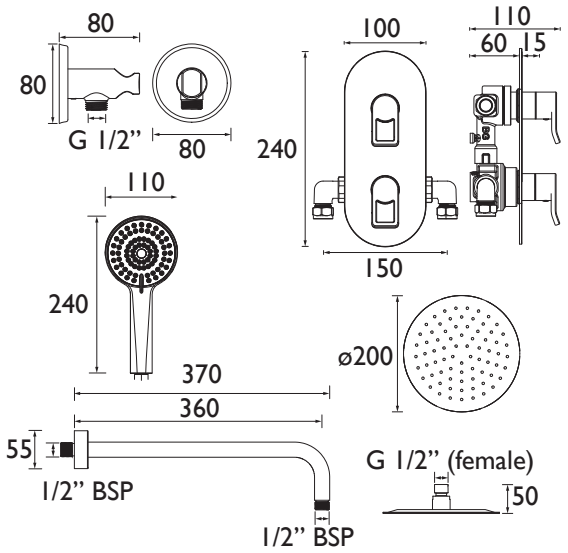

Product Certifications:

Unified Water Label 8.7 l/min

For more products, visit our website:
http://www.bristan.com

Flow Rates (l/min)

System Pressure (bar)	0.2	0.5	1	2	3	5
Through Handset (mixed)	3.9	8.1	7.6	8.4	8.7	8.8
Through Fixed Head (mixed)	2.8	4.9	7	7.2	8.5	9
Through Handset (without Flow Limiters)	3.3	5.9	8.7	12.8	15.9	NPD
Through Fixed Head (without Flow Limiters)	5.3	9.7	14.3	17.3	NPD	NPD

TECHNICAL DATA SHEET

LIFETIME GUARANTEE *

BRISTAN

D2

Bristan, Birch Coppice Business Park, Dordon, Tamworth, B78 1SG. Web Site: www.bristan.com Telephone: 0330 026 6273. Email: enquire@bristan.com.

* **- Lifetime guarantee applies to products purchased on or after 01/04/2026.** See www.bristan.com/guarantees for more information. The information contained on this page was correct at date of issue. Listed flow rates are indicative for the product. Different plumbing systems and flow regulators can produce higher or lower results. Fitting Dimensions are provided as a guide only. Some variation may occur due to manufacturing tolerances. Bristan pursues a policy of continuous improvement in design and performance of its products and so reserves the right to change specifications without prior notice.