SOQ3 SHCAR C

SONIQUE Shower Range
Sonique3 Thermostatic Concealed Shower Valve with Riser Kit Chrome

Specification

Finish/Colour:	Chrome Plated
Main Construction Material:	Brass; ABS; Stainless Steel
No of Controls:	1
Shower Type:	Concealed Sequential
Shower Head Type:	Single Function Handset
Shower Kit:	Adjustable Riser
Valve/Cartridge Type:	Thermostatic Sequential Cartridge
Maximum Hot Water Supply Temperature °C:	60
Plumbing System Suitability:	Suitable for all plumbing systems
Minimum Dynamic Pressure (bar):	0.2**
Maximum Dynamic Pressure (bar):	5**
****TMV2 Rated only between 1 bar minimum and 5 Bar Maximum Dynamic Pressure**	
Maximum Static Pressure (bar):	10
Connection Inlet:	15mm Compression
Connection Outlet:	G 1/2"
Isolation Valve Included:	No
Check Valve Included:	Yes

Features:

- Supplied with everything you need, including recessed shower valve, hose, riser rail, wall outlet and rub-clean anti-limescale single function handset
- Shower safely with automatic shut-off protection if hot or cold water supply fails
- Includes a single function handset that's easy to keep pristine, with rub-clean nozzles for effortless removal of limescale and debris
- Built to last, backed by a lifetime parts and 1-year labour guarantee

Dimensions (measurements in mm)

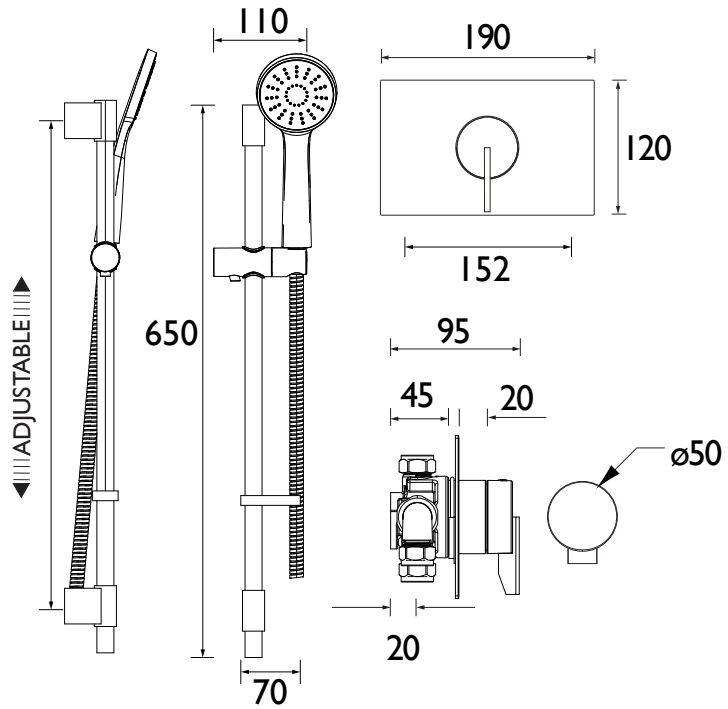

Product Certifications:

WRAS APPROVED PRODUCT

WRAS Certificate No: 240403011
WRAS Expiry Date: 30/04/2029

TMV2 NSF SCHEME — NSF — Certified to NSF TMV2

TMV2 Certificate No: 2503305
TMV2 Expiry Date: 16/03/2030

Unified Water Label — 8.8 l/min

Flow Rates (l/min)

System Pressure (bar)	1	2	3	4	5
Through Handset (mixed)	7.6	8.3	8.8	8.8	8.8

TECHNICAL DATA SHEET

LIFETIME GUARANTEE *

BRISTAN

D6

Bristan, Birch Coppice Business Park, Dordon, Tamworth, B78 1SG. Web Site: www.bristan.com Telephone: 0330 026 6273. Email: enquire@bristan.com.

* **- Lifetime guarantee applies to products purchased on or after 01/04/2026.** See www.bristan.com/guarantees for more information. The information contained on this page was correct at date of issue. Listed flow rates are indicative for the product. Different plumbing systems and flow regulators can produce higher or lower results. Fitting Dimensions are provided as a guide only. Some variation may occur due to manufacturing tolerances. Bristan pursues a policy of continuous improvement in design and performance of its products and so reserves the right to change specifications without prior notice.