# CRU 3TH BAS C

## CRUZAR Tap Range
### Cruzar 3 Tap Hole Basin Mixer Chrome

## Specification

| | |
|---|---|
| **Product Type:** | Bathroom Taps |
| **Main Construction Material:** | Brass |
| **Mount Type:** | Deck |
| **Handle Type:** | Crosshead |
| **Connection Inlet:** | 15mm Compression |
| **Connection Outlet:** | 5lpm Coin-Slot Aerator |
| **Number of Tap Holes:** | 3 |
| **Valve/Cartridge Type:** | 1/2" Ceramic Disc Valve - 1/4 turn |
| **Plumbing System Requirements:** | Suitable for all plumbing systems |
| **Minimum Dynamic Pressure (bar):** | 0.5 bar |
| **Maximum Dynamic Pressure (bar):** | 5 bar |
| **Maximum Hot Water Temperature °C:** | 65°C |
| **Maximum Static Pressure (bar):** | 10 bar |
| **Flow Type:** | Single |
| **Isolation Included:** | No |

## Features:

- This tap has a flow regulator, which limits the flow of water to 5 litres per minute, reducing the amount of water you use.
- Long life 1/4 turn ceramic disc valves for added durability and smooth control.
- A hard-wearing, flawless, scratch resistant chrome finish that lasts for years. Salt spray tested to ensure added durability.
- 10 year parts and 1 year labour guarantee for peace of mind.
- Robust metal fixing nut to secure the tap in place reducing the risk of loosening over time.

## Dimensions (measurements in mm)

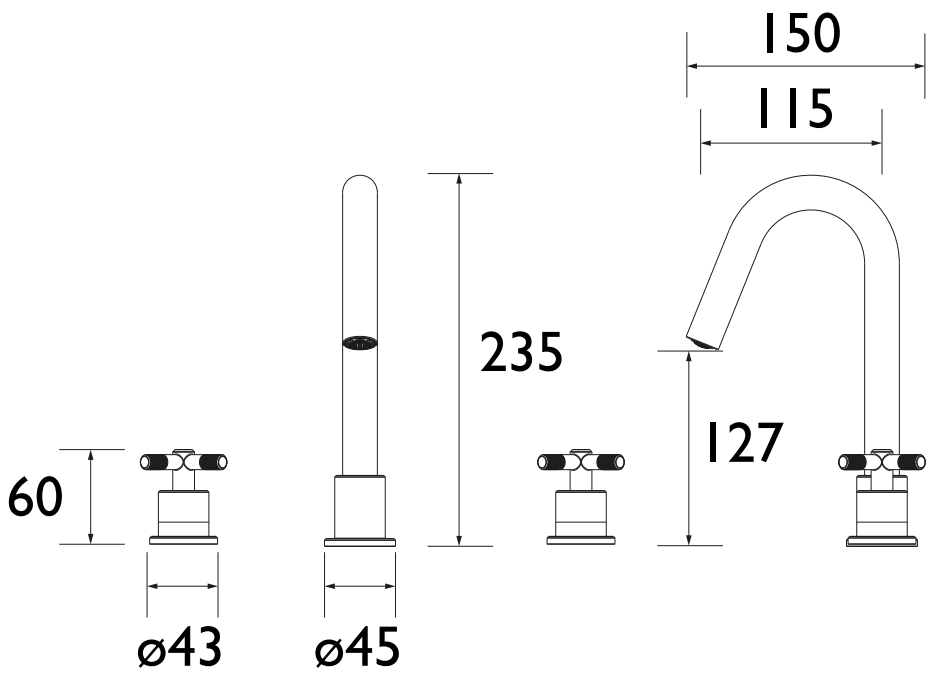


## Product Certifications:

WRAS APPROVED PRODUCT

WRAS Certificate No: 250703306
WRAS Expiry Date: 31/07/2030

Unified Water Label 4.7 l/min

For more products, visit our website:
http://www.bristan.com

## Flow Rates (l/min)

| System Pressure (bar) | 0.5 | 1 | 2 | 3 | 4 | 5 |
|---|---|---|---|---|---|---|
| CRU 3TH BAS C (mixed) | 3 | 4.2 | 4.7 | 4.7 | 4.8 | 4.9 |

TECHNICAL DATA SHEET

TOP QUALITY 10 YEARS GUARANTEED

BRISTAN

D3

Bristan, Birch Coppice Business Park, Dordon, Tamworth, B78 1SG. Web Site: www.bristan.com Telephone: 0330 026 6273. Email: enquire@bristan.com.

* - **10 year guarantee applies to products purchased on or after 01/04/2021. Non-chrome product finishes carry a 3 year guarantee on finish.** See www.bristan.com/guarantees for more information. The information contained on this page was correct at date of issue. Listed flow rates are indicative for the product. Different plumbing systems and flow regulators can produce higher or lower results. Fitting Dimensions are provided as a guide only. Some variation may occur due to manufacturing tolerances.
Bristan pursues a policy of continuous improvement in design and performance of its products and so reserves the right to change specifications without prior notice.