Burlington®
Yesterday's designs TODAY'S TECHNOLOGY

300 Single Door Storage Unit	**F30**
600 Double Door Storage Unit	**F60**
600 Double Door Basin Unit	**F6B**

IMPORTANT: This unit must be securely fixed to a wall. Ensure that the top is horizontal before marking the wall for fixing. The wall fixings supplied may not be suitable for your installation. You may need to source alternatives depending on the material and strength of the wall you are fixing to.
Buffers are supplied to stop the crash of the doors and drawers. These can be fitted if necessary.
The handle installation holes are not pre-drilled on single door unit. Please refer to the template supplied with single door unit to drill the installation hole.

Parts Supplied:

		ST5 * 50mm					
F30	2	2	1	8	2	1	2
F60/F6B	2	2	2	8	4	1	2

- Place the cabinet in final position, and check for level. If not, please adjust the 2 feet at the bottom of the cabinet.

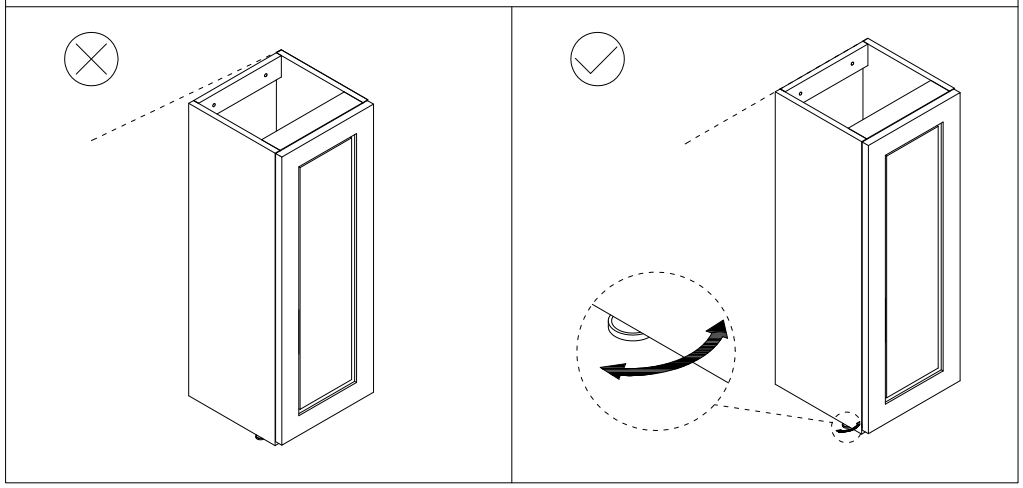

- Fix the cabinet onto the wall.

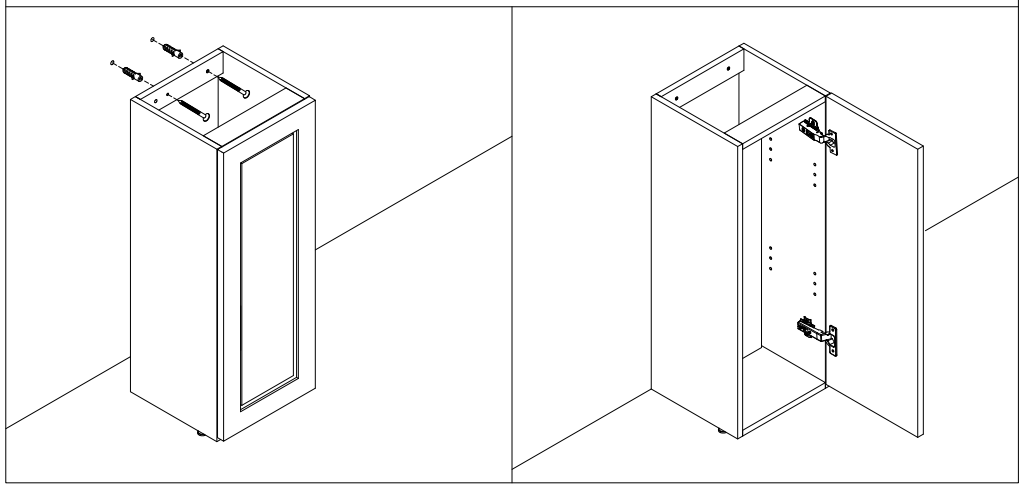

- Check the door for level. If not, please adjust the screw on the hinge.

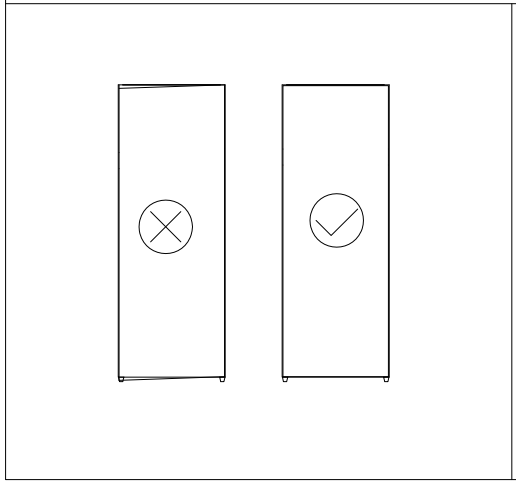

- Anti-Clockwise adjustment lifts the top corner.
- Clockwise adjustment drops the top corner.

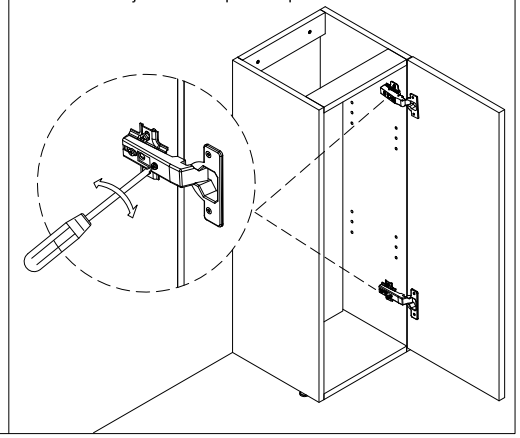

- Please remove the protecting film before installing the g lass shelf.
  Please plug in plastic clamp in the proper position, then insert the glass shelf.

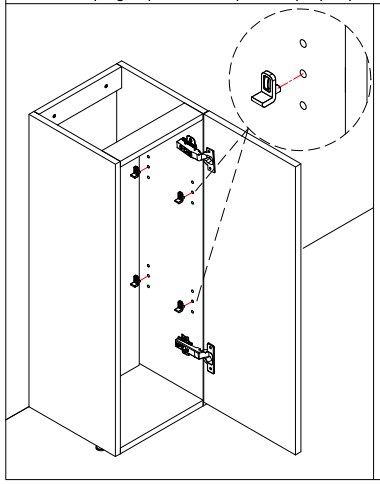

Place silicon seal to top surfaces where worktop/basin sits, and back edge of worktop/basin to wall. This is to prevent water collecting between the worktop/basin and the cabinet.

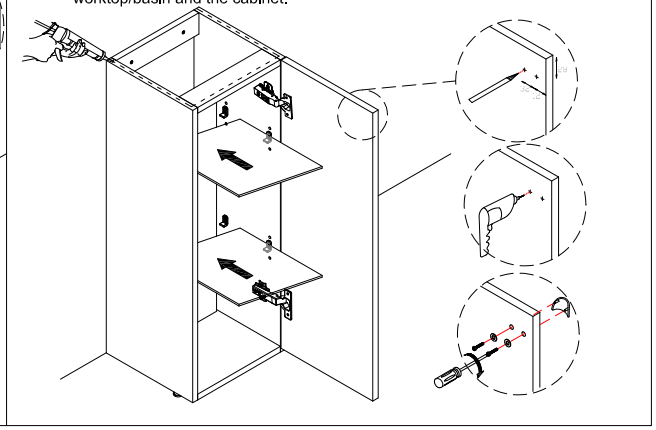

Instructions for door up/down reversal (for 300 Single Door Storage Unit F30)

1: Unscrew the hinges from the carcass, and from the opposite side remove parts A.

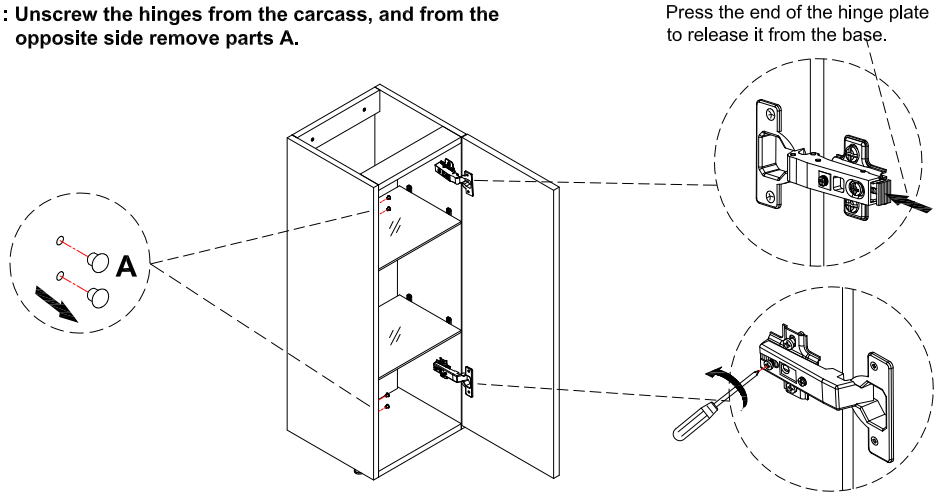

2: Unscrew the hinges from the door.

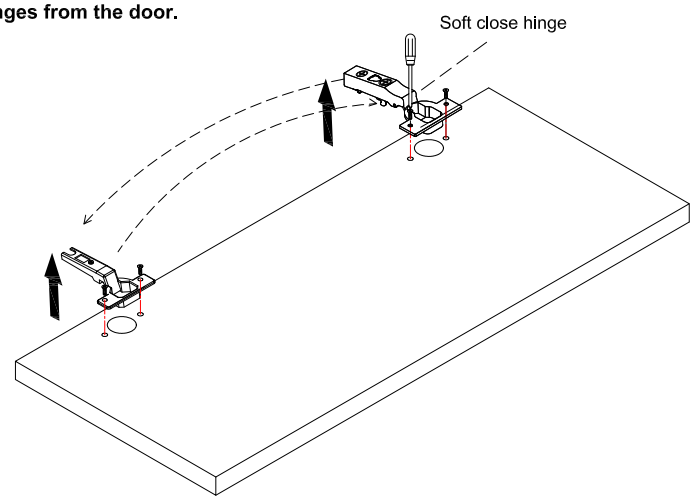

3: Exchange the two hinges and attach them to the door.

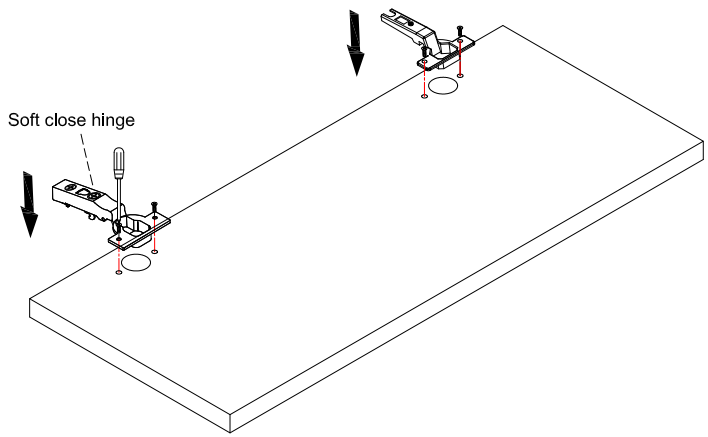

4: Reattach the door to the carcass, and Insert parts A.

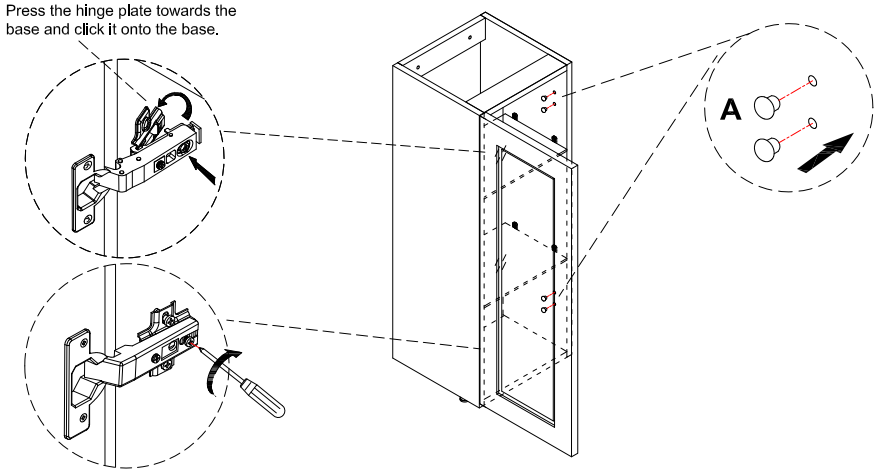

Care and Maintenance: This is a wood product, and has a water resistant finish. It should not be left wet, and the quality of the finish is best maintained if it is wiped with a dry cloth after use. It should only be cleaned using a soft damp cloth followed by a dry cloth. Do not use bleach or any abrasive cleaner.
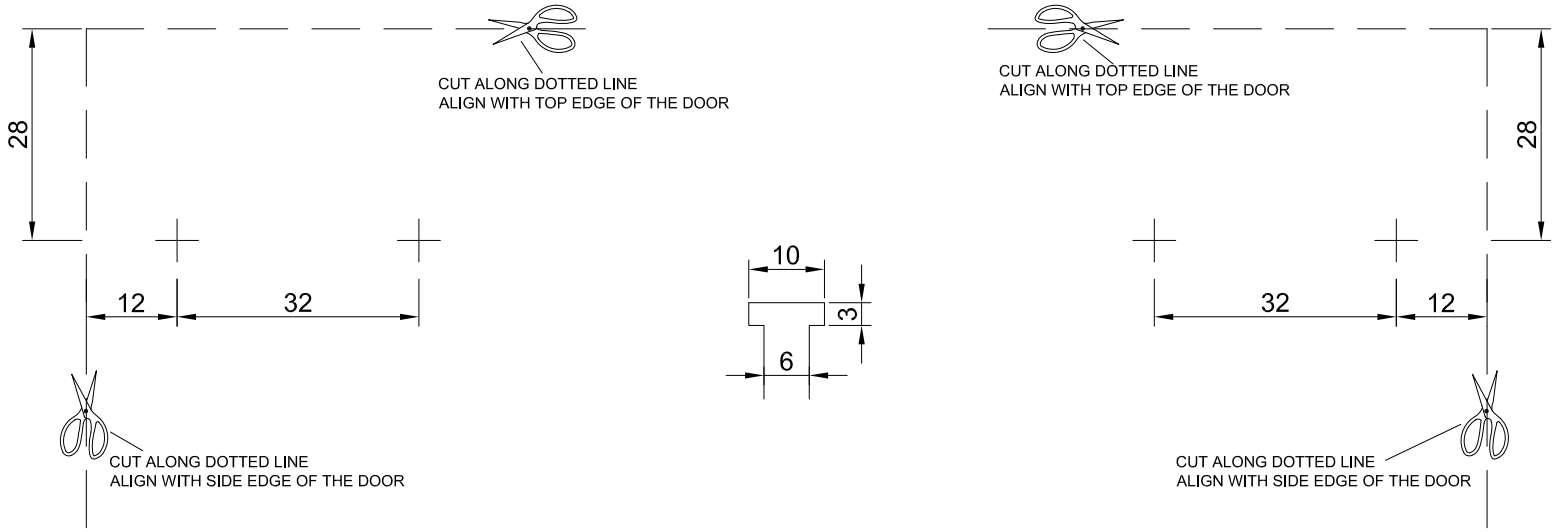
Please decide to handles (left hand or right hand) of the installation first.
Then use the template supplied to drill the handle holes.
It should be contersink holes as below diagram.