TAPWARE

Motif

Motif Bath Shower Mixer

Product Code: MOT106

Finish: Chrome

Features

Construction:	Brass & ABS
Valve/Cartridge type:	¼ Turn Ceramic Disc
Supply:	Suitable For Low Pressure Systems
Working Pressures:	0.1 - 5.0 bar
Inlet connections:	¾" BSP

- 1/4 Turn Ceramic Disc Handles Ensure A Smooth Operation And Longer Life
- Comes Complete With Single Mode Shower Kit And Wall Bracket
- Products Which Are Easy To Use By All The Family

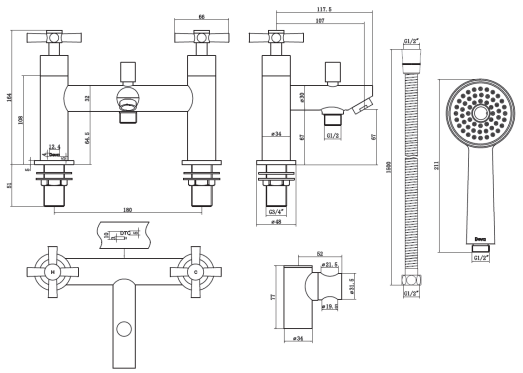

*Please refer to website for full warranty details.

Flow (Bar - l/min, open outlet)

Spout

Flow 0.1	Flow 0.3	Flow 0.5	Flow 1.0	Flow 2.0	Flow 3.0	Flow 4.0	Flow 5.0
6.8	10.7	14.4	20.9	30.1	37.1	43.1	48.4

Handset

3.1	4.3	5.8	8.6	12.8	16.1	18.8	21.4

kiwa approved KUKreg4 ATS 3 2307718

WRAS APPROVED PRODUCT 2309307

12 YEAR WARRANTY* *TERMS & CONDITIONS APPLY

THE INFORMATION ON THIS SPECIFICATION DOCUMENT WAS CORRECT AT THE DATE OF ISSUE. SOME VARIATION MAY OCCUR DUE TO THE MANUFACTURING TOLERENCES AND SITE SPECIFIC CONDTIONS.