FIREBIRD'S CONDENSING RANGE OIL BOILER

ENVIROMAX

THE ULTIMATE HEATING EXPERIENCE

CONDENSING RANGE MANUAL

COMBI 'C'

SYSTEM 'C'

KITCHEN 'C'

HEATPAC 'C'

ISO 9001:2000 QUALITY

energy saving recommended

A SEDBUK BAND

FIREBIRD

TECHNOLOGY OF THE FUTURE TODAY

INSTALLATION | COMMISSIONING | SERVICING | USER INSTRUCTIONS

THIS MANUAL MUST REMAIN WITH THE HOUSEHOLDER ON COMPLETION OF INSTALLATION

INSTALLATION & COMMISSIONING:

Boilers must be installed, commissioned and serviced by qualified and experienced persons and as set out in the Installation Manual, using correct test equipment.

EXPANSION VESSEL:

Total water content of system and boiler must be calculated to determine if an additional pressure vessel is required.

HARD WATER - LIMESCALE:

Failure to check water hardness and fit appropriate water softening equipment will result in scale build up and consequent reduction in water heating performance. Check with local Water Authority if in doubt.

WARNING:

The manufacturer cannot accept responsibility for any damage to persons, animals or property due to error in installation or in the burner adjustment or due to improper or unreasonable use or non observance of the technical instruction enclosed with the burner, or due to the intervention of unqualified personnel.

GUARANTEE:

- **All Firebird oil Boilers have a 2 year comprehensive warranty which extends to 5 year on the boiler shell.**
- **The Guarantee card must be fully completed and returned to Firebird within 28 day's of complete installation & commissioning.**
- **Consumable components, the nozzles and the oil hose are excluded.**
- **The terms laid down on the Guarantee must be adhered to.**

We would like to thank you for purchasing a high efficiency Firebird C Range Condensing domestic central heating oil fired boiler. This instruction manual is produced for the reference and guidance of qualified installation engineers such as those who are OFTEC registered. EU legislation governs the manufacture, operation and efficiency of all domestic central heating oil boilers. Our boilers and burners will are supplied as matched units tested and approved to OFTEC Standard OFS Al00.

FIREBIRD Boilers are full manufacturing members of OFTEC (Oil Firing Technical Association) and are participating in its Boiler testing and approvals programme to comply with OFS A100 and EC Efficiency Directive.

Boilers must be installed, commissioned and serviced by qualified and experienced OFTEC approved personnel (U.K. only). It should be noted that it is the responsibility of the Installer/Householder to ensure that the boiler is properly commissioned. Failure to do so may invalidate the boiler guarantee and any extended warranty.

All appropriate OFTEC manuals and BS Standards should be studied and their requirements adhered to and used in conjunction with these instructions. This manual includes a list of some BS Standards and Building Regulations.

OFTEC is conducting training and registration of engineers and this is to be commended, as reading of this manual alone for installation and servicing procedures cannot replace the critical advantage provided by training and years of experience.

1. INTRODUCTION

Firebird domestic oil fired condensing boilers are highly efficient and are all independently certified to Sedbuk Band A. They use less fuel and have lower running costs than non-condensing boilers. Because of their increased efficiency they emit less carbon dioxide than non-condensing boilers, which will contribute to efforts to reduce global warming. The incredible efficiency of the Firebird C Range Condensing Boiler is due to the development of a single boiler unit with three unique heat exchanger units. This gives a exchange surface greater than non-condensing boilers.

This additional surface area increases the amount of heat extracted from the combustion process and thus reduces the heat wasted to atmosphere. So much heat is extracted from the combustion gases that their water vapour element condenses into liquid form, releasing the latent heat that was used to create the vapour in the first place. It is this heat gain that gives the condensing boiler its significant advantage over a non-condensing model. In order to enable this high level of heat extraction to take place, the water in the boiler's heat exchanger must be cooled down to about 55°C or less, this means that the boiler is working at its maximum efficiency.

The condensate produced is often mistakenly considered to be highly acidic. In fact the acidity of condensate from a Firebird C Range Condensing Boiler will be found to be as low, if not lower, than that of vinegar.

A 20°C. differential between flow and return should be maintained to achieve maximum performance from the Firebird C Range Condensing Boiler.

The Firebird C Range Condensing Boiler is suitable for underfloor heating provided the return temperature is above 40°C. at all times.

The Firebird C Range Condensing Boiler even when not working in condensing mode will still operate at extremely high efficiencies making it suitable for fitting to an existing heating system without alteration to the radiator sizes.

STANDARDS & REGULATIONS

To ensure the highest standards of installation & safety, it is important that the boiler be installed in compliance with the following regulations where applicable.

All **CURRENT** editions of the appropriate Building Regulations:-

Part L & J	**England & Wales**
Part F	**Section III Scotland - Conservation of Fuel Power**
Part L	**Northern Ireland - Conservation of Fuel Power**
Part J	**Republic of Ireland - Conservation of Fuel Power**
BS 5410	Part 1 1997. Code of practice for Oil Firing Installations.
BS 799	Part 5 1987. Specification for Oil Storage Tanks.
BS 4876 1984.	Performance requirements for oil burning appliances.
BSEN 12828:2003	(UK National Annex). Heating Systems in Buildings - Designed for water based heating systems
BS 7074	Part 1 1989. Application, selection and installation of expansion vessels and ancillary equipment for sealed water systems.
BS 5446 1990.	Installation of hot water supplies for domestic purposes.
BS 7593 1992.	Code of Practice for treatment of water in heating systems.
BS 715 1989.	Metal flue pipes, fittings, terminals and accessories.
BS 1189 1989.	Clay flue linings and flue terminals.
BS 4543 part 3 1990.	**Factory made insulated chimneys for oil fired appliances.**
BS 6700.	Design, installation, testing and maintenance of Services supplying water.
BS 7671.	
	Current IEE Regulations. Local Water Undertaking Bylaws.
	Water supply (water fittings) Regulations 1999.
	The Control of Pollution (Oil) Regulations.

In addition, the work must comply with OFTEC Installation Requirements for oil fired boilers and oil storage tanks.

The installer should also be aware of his/her responsibilities under The Health and Safety at Work Act. The interests of safety are best served if the boiler is installed and commissioned by a competent engineer, OFTEC trained and Registered. If not a Building Notice is required in England & Wales. Other parts of the British Isles including the Channel Islands also require notification to building Control.

It is the responsibility of installer and everyone concerned with any aspect of installation to ensure that all applicable standards and regulations are fully adhered to.

OFTEC also publish excellent guides including: Safe Working Practices for Oil Firing Technicians' - OFTEC Technical Book Three (Installation requirements for Oil Fired Boilers and Oil Storage Tanks) - OFTEC Technical Book Four (Domestic Heating Systems) and it is recommended that these should adhered to Domestic Heating Design Guide.

COPIES OF BRITISH STANDARDS MAY BE PURCHASED DIRECT FROM:
BSI (Customer Services),
389 Chiswick High Rd., London W4 4AL. Tel.: 0181-9967002 Fax: 0181-9967001
International and EC Standards are also available from above.

OFTEC PUBLICATIONS ARE AVAILABLE FROM:-
OFTEC, Oil Firing Technical Association,
Foxwood House, Dobbs Lane, Kesgrave, Ipswich. IP5 2QQ
www.oftec.org

BOILER INSTALLATION:

Other than special considerations for condensate removal and plume dispersal, the installation of oil firing condensing boilers is the same as for non-condensing boilers.

BS 5410 : Part 1 1997 gives the requirements for domestic boiler and oil storage installations.

For condensing boilers the same requirements apply for installation with regard to cleaning and flushing and providing inhibitors as are followed for any other boiler. Manufacturers instructions must always be followed together with the requirements of BSEN 12828, 2003 & BS EN 12831, 2003, which supersede BS 5449 1990, and the statutory requirements of the Building Regulations.

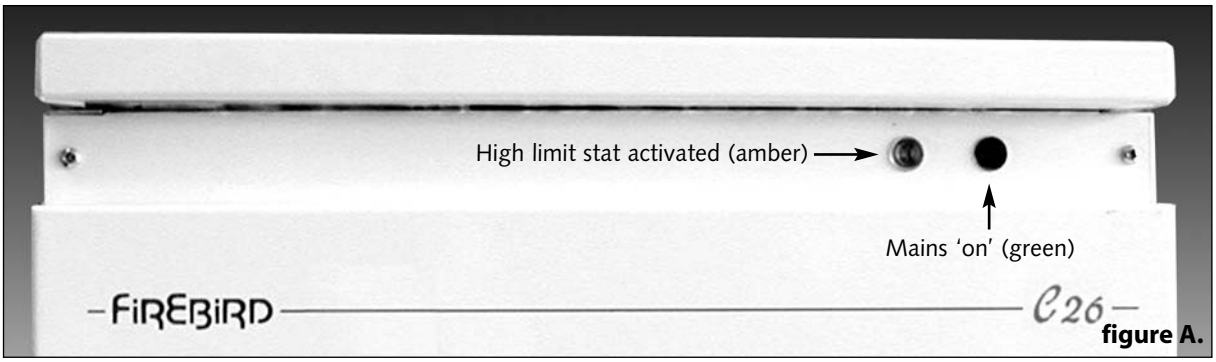

figure A.

KITCHEN C MODEL OPERATING PROCEDURE (All models)

TO START THE BOILER FOLLOW THIS SEQUENCE:

■ Turn on fuel supply.

■ Switch power supply to boiler 'ON'.

■ Turn timer control (If Fitted) to on

■ Set the boiler thermostat to the required temperature (figure B). The boiler thermostat controls the boiler operation by automatically maintaining the required boiler water temperature output. Safe operation is also maintained by the burner control system which provides the required ignition and shut off sequence. If the optional timer control is fitted this will automatically switch the boiler off and on when heat is required.

THE BOILER CAN BE TURNED OFF BY ANY OF THE FOLLOWING MEANS:

■ Turn the timer control (if fitted) to OFF.

■ Turn OFF the mains electrical supply to the boiler.

WHEN SERVICING ALWAYS SWITCH OFF THE MAINS SUPPLY TO THE BOILER.

figure B.

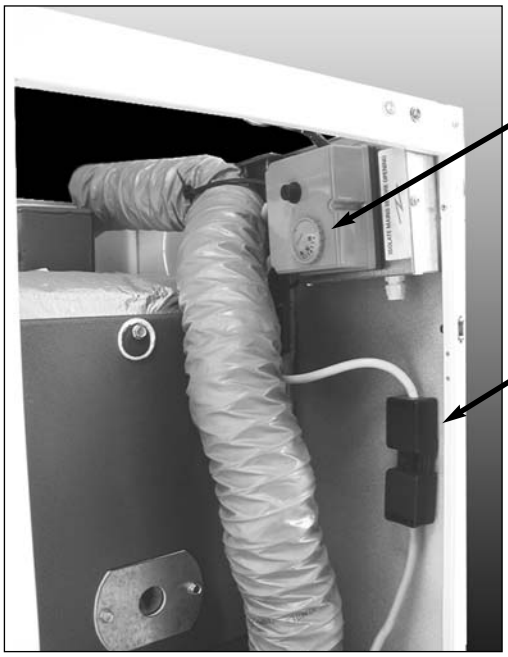

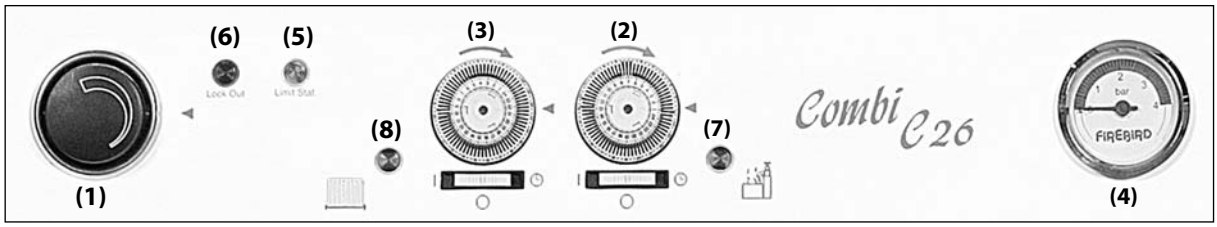

Numbers for identification purposes only.

COMBI C BOILER CONTROLS

Visible on the front boiler casing are:

(1) • Central Heating thermostat control.
(2) • Time control - Domestic Hot Water & **(3)** Central Heating (optional).
(4) • Pressure Gauge.

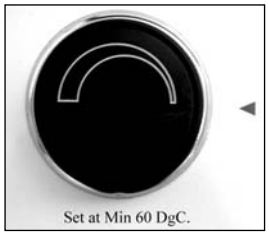

Also indicator lights. These are:
(5) • High Limit. (Orange) (Reset Button see diagram on **page 13**)
(6) • Burner lockout. (Red)
(7) • Domestic Hot Water. (Green)
(8) • Central Heating. (Green)

COMBI C OPERATING PROCEDURE

TO START THE BOILER FOLLOW THIS SEQUENCE:

- Turn on fuel supply.
- Switch on power supply to boiler.
- Set the boiler thermostat to the required temperature. (For Central Heating Max. 80˚C, Min. 60˚C)
- Set timers - Domestic Hot Water & Central Heating.

The central heating thermostat controls the boiler **when in central heating mode only**, thus maintaining the required boiler water temperature output for central heating.

Domestic hot water temperature is controlled by separate non adjustable thermostat, plus thermostatic mixing valve. **See page 7.**

Safe operation is also maintained by the burner control system which provides the required ignition and shut off sequence.

If the optional timer controls are fitted these will automatically switch the boiler off and on, as and when **Cental Heating or Domestic Hot Water** is required.

THE BOILER CAN BE TURNED OFF BY ANY OF THE FOLLOWING MEANS:

- Turn both timer switches to OFF.
- Turn OFF the mains electrical supply to the boiler.

WHEN SERVICING ALWAYS SWITCH OFF THE MAINS SUPPLY TO THE BOILER

BURNER LOCKOUT

To reset when Lock-out light shows:
Press glowing reset button on burner control box.

Reset Button Inside Burner Box

The boiler is factory fitted with a burner control box lockout safety feature which operates automatically if a fault occurs in the burners operation. Should this occur, the light on the front of the burner - See above - will illuminate and its cause must be investigated. This could be caused by:

A. An interruption in the fuel supply. (Eg. empty oil supply tank)
B. An electrical supply fault.
C. A fault with the burner or its safety control system.
D. The failure of a component. (Eg. photo cell)
E. Worn or dirty oil nozzle.

Before attempting to restart the boiler the front panel and the burner cover should be removed and a visual check made for any obvious problems such as oil leaks, loose connections etc.

ENSURE OIL TANK CONTAINS CORRECT GRADE FUEL.

TO RESTART THE BOILER

1. Press reset button (see diagram above)
2. Ensure that the boiler thermostat, time switch (if fitted) and any external controls connected to the boiler are set to call for heat.
3. Check that the oil supply valves are open and that there is sufficient oil in the tank.
4. Check that the burner lockout light is unlit and with the 'mains ON' the boiler will be ready to commence its start sequence.

HOW TO BLEED AN OIL PUMP

See Page 15 - Burner Specifications. Ref: Priming Pump.

SERVICING

The boiler requires servicing on an annual basis to ensure it maintains its efficiency, continues to perform reliably and as a regular check on its built-in safety features.

It is important that servicing should be conducted by a competent engineer, preferably one who is OFTEC trained and registered.

COMBI C BOILER OPERATION AND CONTROL

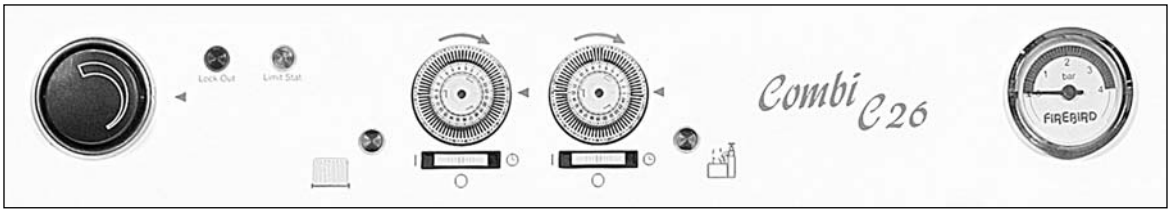

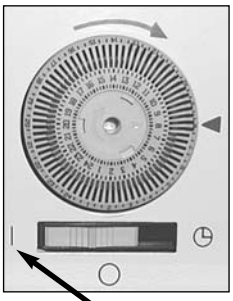

Timer Switch
Pos. A
Constant

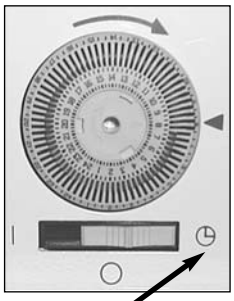

Timer Switch
Pos. B
Timed

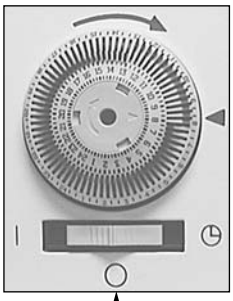

Timer Switch
Pos. C
Off

PROGRAMMING GUIDE

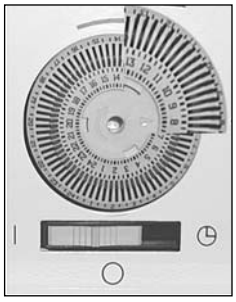

SETTING UP
The outer dial should be set to the current time. Rotate the dial slowly in clockwise direction, until the correct hour is aligned with the arrow head printed on the dial. Note that the outer dial is printed with the 24 hour clock -
8:00 a.m. = 8 on the dial. 8:00 p.m. = 20 on the dial.

Do not attempt to rotate the dial in an anti-clockwise direction.

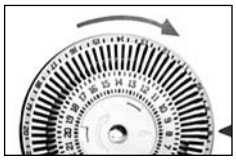

PROGRAMMING SWITCHING TIMES
Set all tappets between the on and off times required, to the outer edge of the dial (see figure 1). E.g. to set on at 8:00 a.m. - Off at 1:00 p.m. push tappets between dial numbers 8 and 13 to outer edge of dial. Set any other required switching times in a similar manner.

MANUAL SWITCH
Manual switch operation: The manual switch will provide Fixed On / Fixed Off / Auto control, thereby allowing manual control of the switched output without disrupting the timed (tappet) settings. Please refer to the illustration above.
The slide switch can be set in one of the three positions available 'on' and 'off' are fixed selections - the timer will remain in the on or off condition until you next use the manual switch to change the setting. 'auto' is the normal position for the switch, allowing control to be governed by the tappet settings - in accordance with 'programming switching times' above

DOMESTIC HOT WATER PRODUCTION

Domestic hot water production cycle commences once the timer has been set and switched on. If boiler and system are cold allow 20 - 30 minutes for domestic hot water heat store to reach working temperature. Central heating is controlled by setting the time switch - also located on this panel. The boiler control system always gives priority to domestic hot water production by automatically overriding the central heating mode as necessary. The interruption to central heating lasts only as long as the demand for hot water continues. This has no significant effect on the heating circuit. Once hot water demand has ceased the boiler will automatically return to central heating mode if there is a demand. When hot water only is required turn central heating timer switch to 'off'.

If alternative programmer is used then refer to separate programmer instructions.

BY REQUEST COMBI C BOILERS ARE AVAILABLE WITH BUILT-IN TIMERS.

DOMESTIC HOT WATER OPERATION

Hot water is available on demand by turning on a hot tap. This activates the flow switch which powers the domestic hot water pump ensuring that all boiler hot water is diverted to the domestic heat exchanger which heats the incoming mains water to give instant mains pressure hot water.

Hot water is then mixed with mains cold water by a thermostatic mixing valve set to ensure that it does not exceed 65°C. This is shown in accompanying photograph bellow.

The burner may continue to run after hot water draw off has ceased - to ensure the pre-set temperature is restored in the heat store. This may also occur at any time if the control system senses that there is a need to replenish the heat store, i.e. if there has been natural temperature drop in heat store during long periods of low demand for domestic hot water.

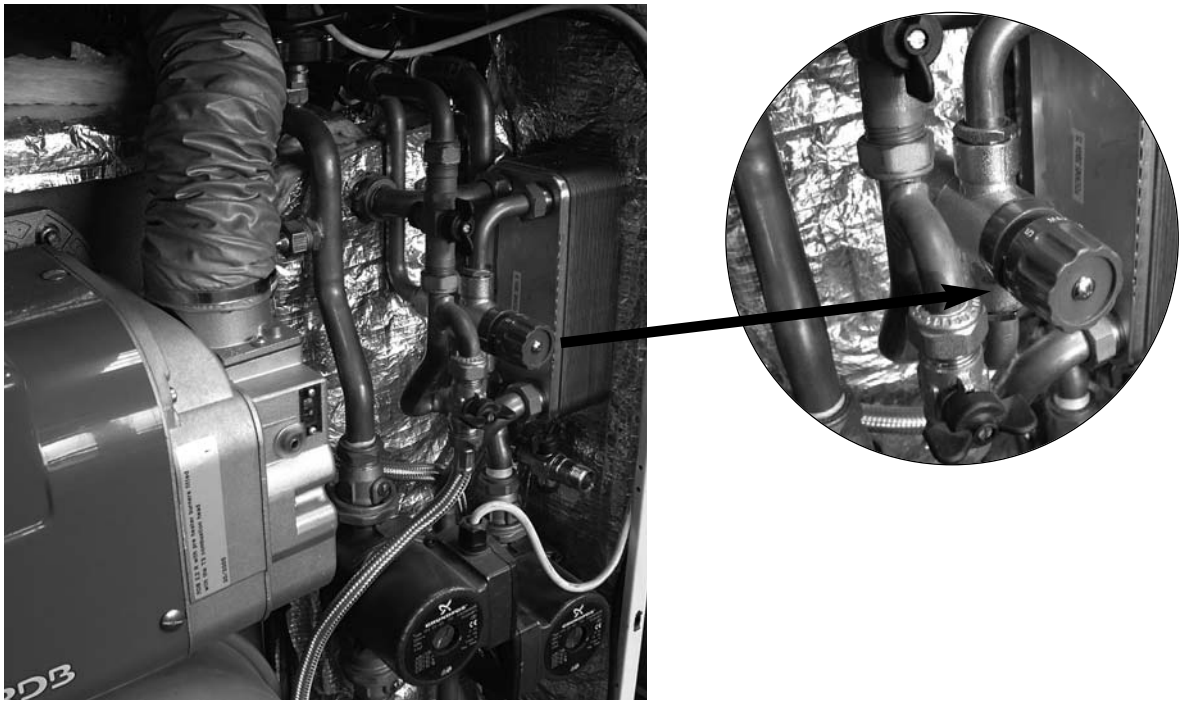

INTRODUCTION TO COMBI OPERATIONS

FIREBIRD COMBI C

THE Firebird Combi C is designed to give separate control to both the domestic hot water and to the central heating. The Combi C has five thermostats that help to achieve this.

78˚C Tank Thermostat.
The Tank Thermostat controls the temperature of the heat store (or Slave Tank). Positioned at the side of the boiler. The Tank Thermostat sensor is located in stat pocket in the top of the tank When the thermostat senses that the heat store is seeking heat it energizes the relay in the control panel which in turn sends power to the domestic circulating pump and burner. The Flow Switch is the only other device that will energies the relay in this way when it detects the flow of water on opening a tap. This heat store is a tank with a bank of water stored at a higher temperature than that normally used on a central heating circuit, and is used for domestic hot water production. The temperature of this heat store has priority over Central heating. Central heating will not work until the heat store reaches a temperature of 78˚C.+-3˚C

The Boiler Control Thermostat. 60˚C to 80˚C
When the central heating is on it does not effect the temperature in the heat store. The check valve on the domestic flow from the boiler prevents any circulation to or from the heat store. The boiler control thermostat controls the boiler temperature when in central heating mode. The sensor from this thermostat is situated in stat pocket in the boiler.

The High Limit Thermostat 110˚C.
The High limit thermostat cuts off power supply to the burner should all thermostats fail. It is a manual re-set thermostat, and will stay off until such time that it is re set. If this thermostat is activated, the reason for activating must be resolved before re setting. The sensor from this thermostat is situated in stat pocket in the boiler.

The Over Heat Thermostat.
The over heat thermostat activates the domestic circulating pump when due to residual heat rise in the boiler, the temperature reaches 93˚C. The water is circulated from the boiler into the heat store tank thus preventing the boiler from activating the high limit thermostat. The sensor from this thermostat is situated in stat pocket in the boiler.

The Early Alert Thermostat (87˚C).
The early alert thermostat controls the burner when the Combi is operating in domestic hot water mode. If the temperature in the boiler reaches 87˚C before the tank thermostat cuts out, the early alert thermostat cuts off the burner. The sensor from this thermostat is situated in stat pocket in the boiler.

Firebird Kitchen C Model Dimensions (mm)

Front View.

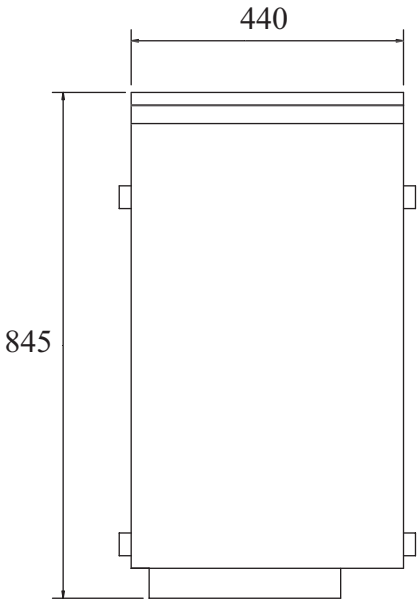

Side View.

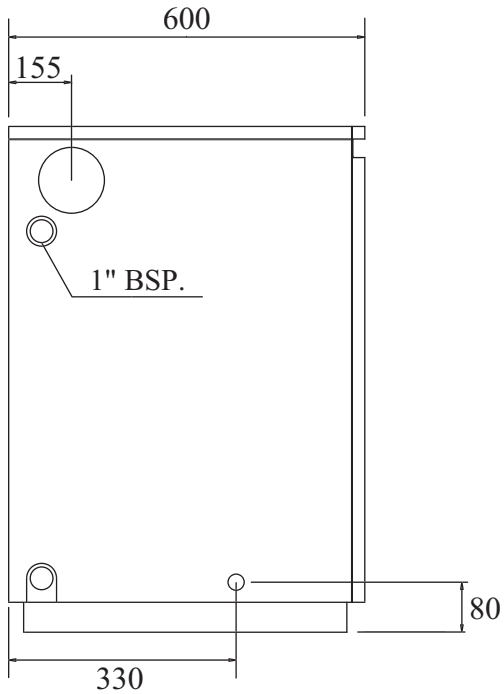

Rear View.

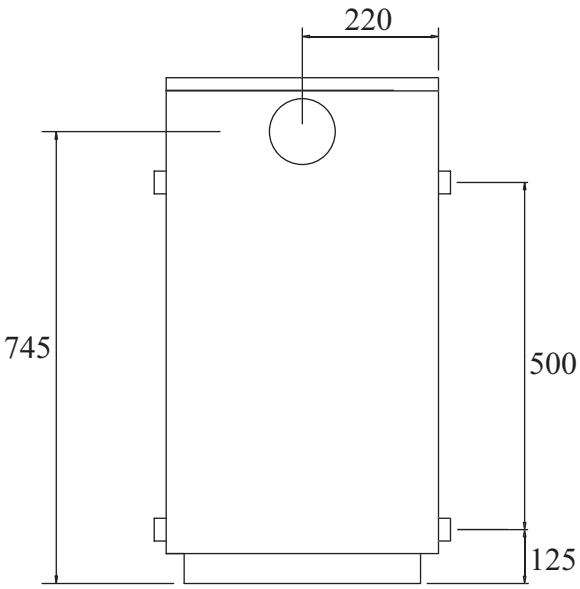

Top View.

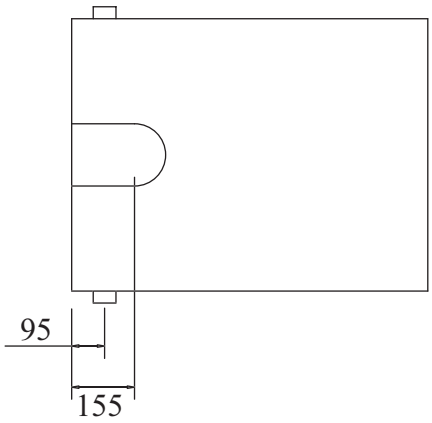

Copper Pipe Not Plastic to be used for a minimum of 1 metre off the boiler

Firebird Combi C Range Dimensions (mm)

Front View.

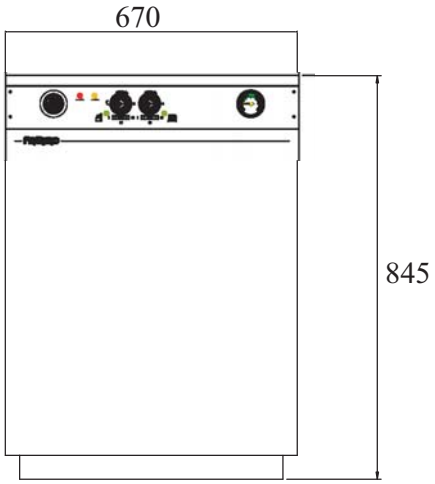

Side View.

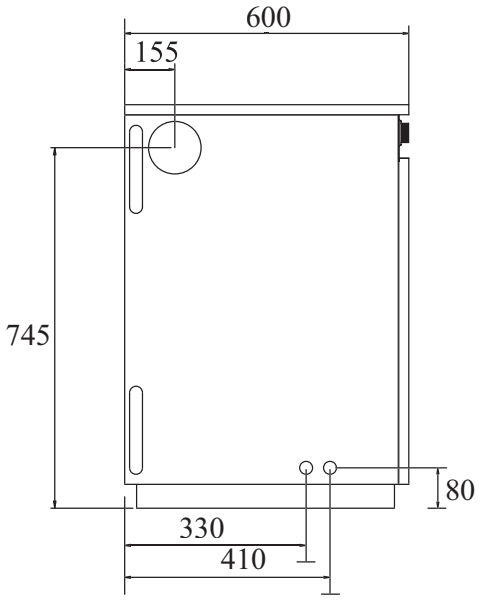

Rear View

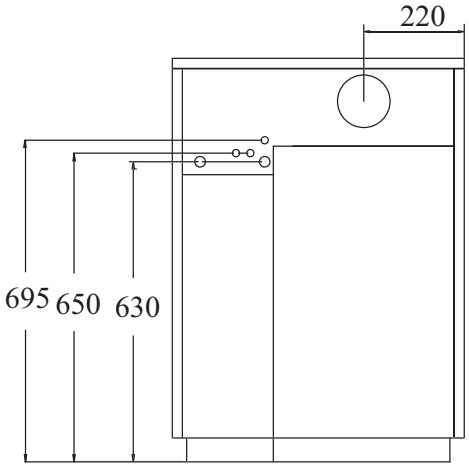

Top View

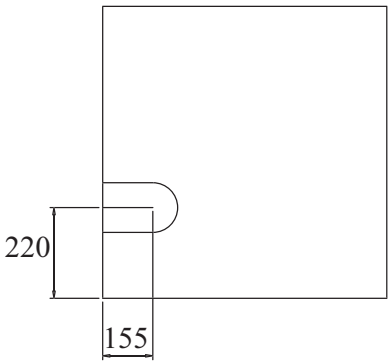

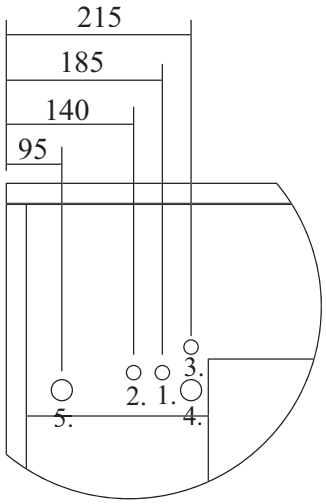

1. Mains Feed.
2. D.H.W.
3. 3bar Safety Valve.
4. C.H. Flow.
5. C.H. Return.

C.H. Flow & Return 22mm Copper
D.H.W. ,Mains feed & Safety Valve 15mm Copper

D.H.W.,Mains feed & Safety Valve 15mm Copper
C.H. Flow & Return 28mm Copper

Copper Pipe Not Plastic to be used for a minimum of 1 metre off the boiler

Firebird System C Range Dimensions (mm)
C20 / C26 / C35

Front View.

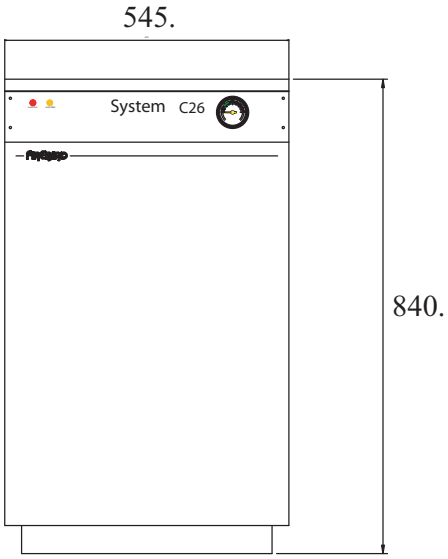

Side View.

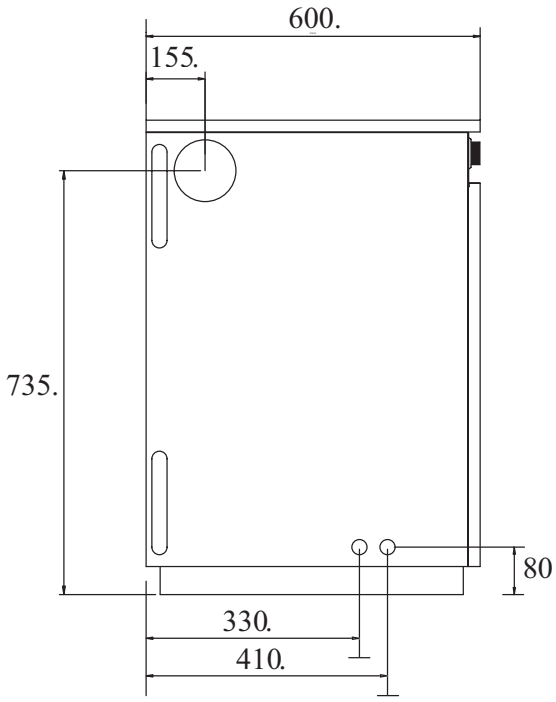

Rear View.

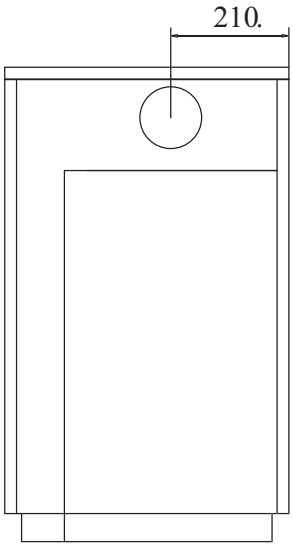

Top View.

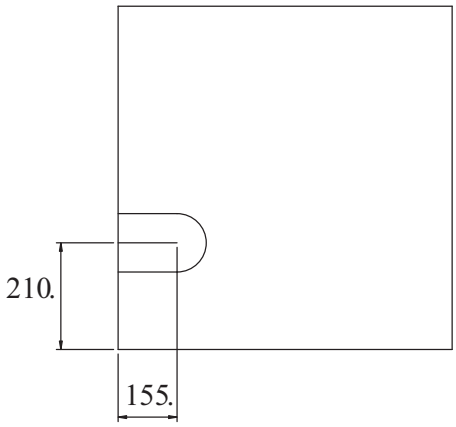

Pressure Vessel Sizes - C20 = 10 Litres C26 & C35 = 12 Litres

C20 & C26 - C.H. Flow & Return 22mm Copper

Mains feed & Safety Valve 15mm Copper

C35 - C.H. Flow & Return 28mm Copper

Copper Pipe Not Plastic to be used for a minimum of 1 metre off the boiler

Firebird Heat Pac, Combi Pac & System Pac C Range

Dimensions (mm)

Heat Pac C & System Pac C

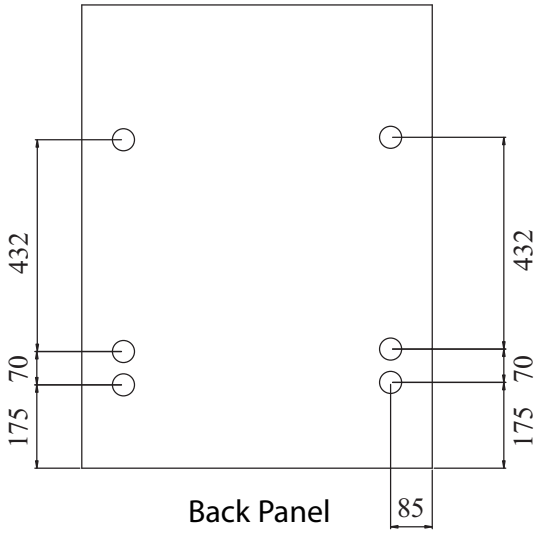

Back Panel

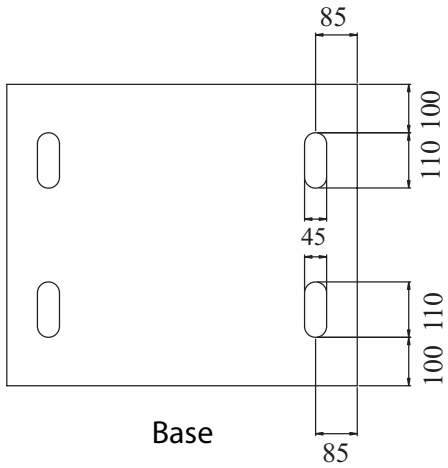

Base

Combi Pac C

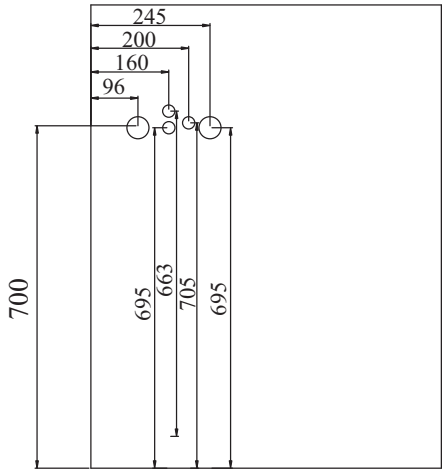

Back Panel

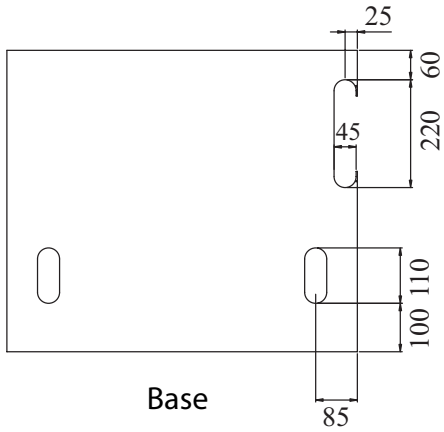

Base

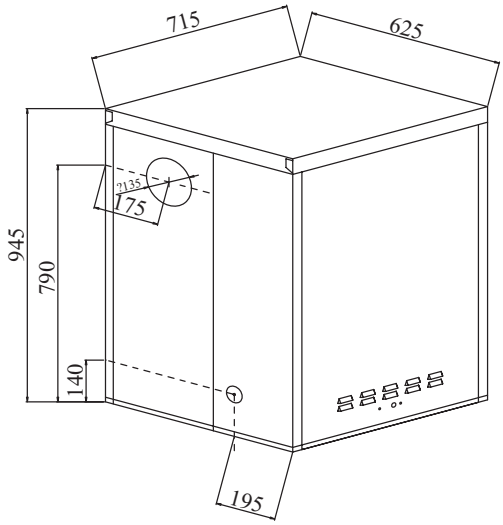

Copper Pipe Not Plastic to be used for a minimum of 1 metre off the boiler

	COMBI 'C'				SYSTEM 'C'				KITCHEN 'C'			
Boiler Model	**C20**	**C26**	**C35**	**C45**	**C20**	**C26**	**C35**	**C45**	**C20**	**C26**	**C35**	**C45**
Max Heat Output Kw	20	26	35		20	26	35		20	26	35	
Btu/h	68'240	88'712	119'420		68'240	88'712	119'420		68'240	88'712	119'420	
CONNECTIONS												
Heating Flow (Copper)	22 mm	22 mm	28 mm		22 mm	22 mm	28 mm		1" Bsp.	1" Bsp.	1" Bsp.	
Heating Return. (Copper)	22 mm	22 mm	28 mm		22 mm	22 mm	28 mm		1" Bsp.	1" Bsp.	1" Bsp.	
Mains Cold Feed (Copper)	15 mm	15 mm	15 mm		15 mm	15 mm	15 mm					
Hot Water Delivery (Copper)	15 mm	15 mm	15 mm									
Drain Off Cock	1/2" Bsp.	1/2" Bsp.	1/2" Bsp.		1/2" Bsp.	1/2" Bsp.	1/2" Bsp.		1/2" Bsp.	1/2" Bsp.	1/2" Bsp.	
Safety Pressure Relief valve outlet (Copper)	15 mm	15 mm	15 mm		15 mm	15 mm	15 mm					
Condense Drain Off Connection.	22 mm	22 mm	22 mm		22 mm	22 mm	22 mm		22 mm	22 mm	22 mm	
Circulating Pump **(Grundfos)**	25/60	25/60	25/60		25/60	25/60	25/60					
Domestic Hot Water Plate Heat Exchanger	25plate	25plate	31plate		25plate	25plate	31plate					
Boiler integral Expansion Vessel Normal Capacity	10 litres	12 litres	12 litres		10 litres	12 litres	12 litres					
	pre-charged to 1 bar.				pre-charged to 1 bar.							
Weight (Dry) Incl. Pallet.	203 kg	206 kg	209 kg		160 kg	163 kg	166 kg		150 kg	153 kg	156 kg	
Water Content Total												
Boiler	24	24	24		24	24	24		24	24	24	
Primary Tank (Litres)	40	40	40									
DOMESTIC HOT WATER GUIDE PERFORMANCE												
120 litre at 40˚C Δt.	C20	C26	C35									
Litres per minute	14	16	20									
FLUE		Concentric Flue				Concentric Flue				Concentric Flue		
Balanced Flue Assembly (mm)	125 (5")	125 (5")	125 (5")		125 (5")	125 (5")	125 (5")		125 (5")	125 (5")	125 (5")	
Conventional flue Socket. (mm)	130 id.	130 id.	130 id.		130 id.	130 id.	130 id.		130 id.	130 id.	130 id.	
Flue Draught Reqd. (Min WG.)	0.040"	0.040"	0.040"		0.040"	0.040"	0.040"		0.040"	0.040"	0.040"	
Conventional Flue (Max WG.)	0.15"	0.15"	0.15"		0.15"	0.15"	0.15"		0.15"	0.15"	0.15"	
THERMOSTATS												
Boiler Central Heating Control	60˚C - 80˚C+- 3˚C				60˚C - 80˚C+- 3˚C				60˚C - 80˚C +- 3˚C			
Boiler Safety Limit.	110˚C +- 3˚C				110˚C +- 3˚C				110˚C +- 3˚C			
Tank (DHW)- Fixed	78˚C +- 3˚C											
Early Alert - Fixed.	87˚C +- 3˚C											
Over-run - Fixed	93˚C +- 3˚C				93˚C +- 3˚C				93˚C +- 3˚C			
HEATING SYSTEM (SEALED) Fit in accordance with BS 7074 Part 1, BS 5449, OFTEC Standards, etc												
Max. Operating Pressure	2.5 Bar				2.5 Bar							
Max. System Pressure cold	1.5 Bar				1.5 Bar							
Min. System Pressure cold	0.5 Bar + 0.3 Bar				0.5 Bar + 0.3 Bar							
Boiler Test Pressure	4.5 Bar				4.5 Bar				4.5 Bar			
Safety Valve Operating Pressure Gauge	0 to 4 Bar				0 to 4 Bar				0 to 4 Bar			
MAINS WATER SUPPLY												
Limescale excess	When over 150/200 ppm. Fit appropriate scale reducer.											
Pressure	10 bar max (Fit pressure reducing valve as necessary)											
	For user Comfort reduce pressure at tap to between 1 and 5 Bar.											
WATER SIDE RESISTANCE												
	Flow Rate To Give A Nominal Output At 10kDifferential											
Flow Rate Measured (Kg h^{-1})	2874.24											
Waterside Resistance Measured (mbar)	0.18											
	Flow Rate To Give A Nominal Output At 20kDifferential											
Flow Rate Measured (Kg h^{-1})	1522.92											
Waterside Resistance Measured (mbar)	0.19											
Pressure Jet Oil Burners	RIELLO RDB 2.2 or ECOFLAM MAX											
Fuel	C2 Kerosene											
Electrical Supply	230v. AC 50Hz To be fused at 5amp.											

4. BOILER TECHNICAL SPECIFICATION

	COMBI PAC 'C'				SYSTEM PAC 'C'				HEAT PAC 'C'			
Boiler Model	**C20**	**C26**	**C35**	**C45**	**C20**	**C26**	**C35**	**C45**	**C20**	**C26**	**C35**	**C45**
Max Heat Output Kw	20	26	35		20	26	35		20	26	35	
Btu/h	68'240	88'712	119'420		68'240	88'712	119'420		68'240	88'712	119'420	
CONNECTIONS												
Heating Flow (Copper)	22 mm	22 mm	28 mm		22 mm	22 mm	28 mm		1" Bsp.	1" Bsp.	1" Bsp.	
Heating Return. (Copper)	22 mm	22 mm	28 mm		22 mm	22 mm	28 mm		1" Bsp.	1" Bsp.	1" Bsp.	
Mains Cold Feed (Copper)	15 mm	15 mm	15 mm		15 mm	15 mm	15 mm					
Hot Water Delivery (Copper)	15 mm	15 mm	15 mm									
Drain Off Cock	1/2" Bsp.	1/2" Bsp.	1/2" Bsp.		1/2" Bsp.	1/2" Bsp.	1/2" Bsp.		1/2" Bsp.	1/2" Bsp.	1/2" Bsp.	
Safety Pressure Relief valve outlet (Copper)	15 mm	15 mm	15 mm		15 mm	15 mm	15 mm					
Condense Drain Off Connection.	22 mm	22 mm	22 mm		22 mm	22 mm	22 mm		22 mm	22 mm	22 mm	
Circulating Pump **(Grundfos)**	25/60	25/60	25/60		25/60	25/60	25/60					
Domestic Hot Water Plate Heat Exchanger	25plate	25plate	31plate		25plate	25plate	31plate					
Boiler integral Expansion Vessel Normal Capacity	10 litres	12 litres	12 litres		10 litres	12 litres	12 litres					
	pre-charged to 1 bar.				pre-charged to 1 bar.							
Weight (Dry) Incl. Pallet.	203 kg	206 kg	209 kg		160 kg	163 kg	166 kg		150 kg	153 kg	156 kg	
Water Content Total												
Boiler	24	24	24		24	24	24		24	24	24	
Primary Tank (Litres)	40	40	40									
DOMESTIC HOT WATER GUIDE PERFORMANCE												
120 litre at 40˚C Δt.	C20	C26	C35									
Litres per minute	14	16	20									
FLUE		Concentric Flue				Concentric Flue				Concentric Flue		
Balanced Flue Assembly (mm)	125 (5")	125 (5")	125 (5")		125 (5")	125 (5")	125 (5")		125 (5")	125 (5")	125 (5")	
Conventional flue Socket. (mm)	130 id.	130 id.	130 id.		130 id.	130 id.	130 id.		130 id.	130 id.	130 id.	
Flue Draught Reqd. (Min WG.)	0.040"	0.040"	0.040"		0.040"	0.040"	0.040"		0.040"	0.040"	0.040"	
Conventional Flue (Max WG.)	0.15"	0.15"	0.15"		0.15"	0.15"	0.15"		0.15"	0.15"	0.15"	
THERMOSTATS												
Boiler Central Heating Control	60˚C - 80˚C+- 3˚C				60˚C - 80˚C+- 3˚C				60˚C - 80˚C +- 3˚C			
Boiler Safety Limit.	110˚C +- 3˚C				110˚C +- 3˚C				110˚C +- 3˚C			
Tank (DHW)- Fixed	78˚C +- 3˚C											
Early Alert - Fixed.	87˚C +- 3˚C											
Over-run - Fixed	93˚C +- 3˚C				93˚C +- 3˚C				93˚C +- 3˚C			
HEATING SYSTEM (SEALED) Fit in accordance with BS 7074 Part 1, BS 5449, OFTEC Standards, etc												
Max. Operating Pressure	2.5 Bar				2.5 Bar							
Max. System Pressure cold	1.5 Bar				1.5 Bar							
Min. System Pressure cold	0.5 Bar + 0.3 Bar				0.5 Bar + 0.3 Bar							
Boiler Test Pressure	4.5 Bar				4.5 Bar				4.5 Bar			
Safety Valve Operating Pressure Gauge	0 to 4 Bar				0 to 4 Bar				0 to 4 Bar			
MAINS WATER SUPPLY												
Limescale excess	When over 150/200 ppm. Fit appropriate scale reducer.											
Pressure	10 bar max (Fit pressure reducing valve as necessary)											
	For user Comfort reduce pressure at tap to between 1 and 5 Bar.											
WATER SIDE RESISTANCE												
	Flow Rate To Give A Nominal Output At 10kDifferential											
Flow Rate Measured (Kg h^{-1})	2874.24											
Waterside Resistance Measured (mbar)	0.18											
	Flow Rate To Give A Nominal Output At 20kDifferential											
Flow Rate Measured (Kg h^{-1})	1522.92											
Waterside Resistance Measured (mbar)	0.19											
Pressure Jet Oil Burners	RIELLO RDB 2.2 or ECOFLAM MAX											
Fuel	C2 Kerosene											
Electrical Supply	230v. AC 50Hz To be fused at 5amp.											

Combi C Control Panel Layout

The control panel is at the top front of the boiler, there are four operational indicator lights on the front of the boiler. See diagram below

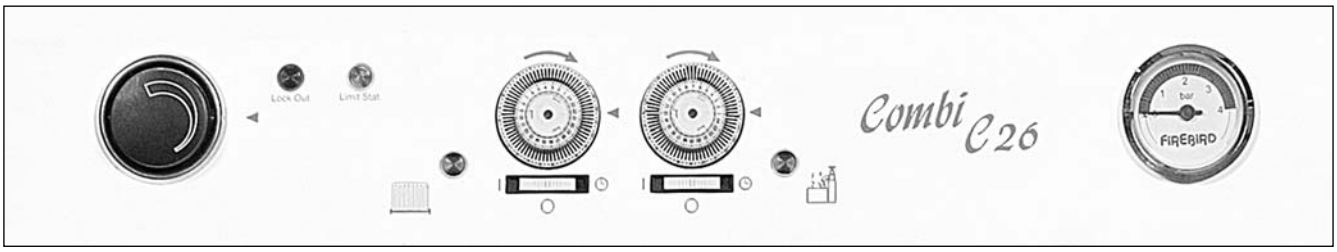

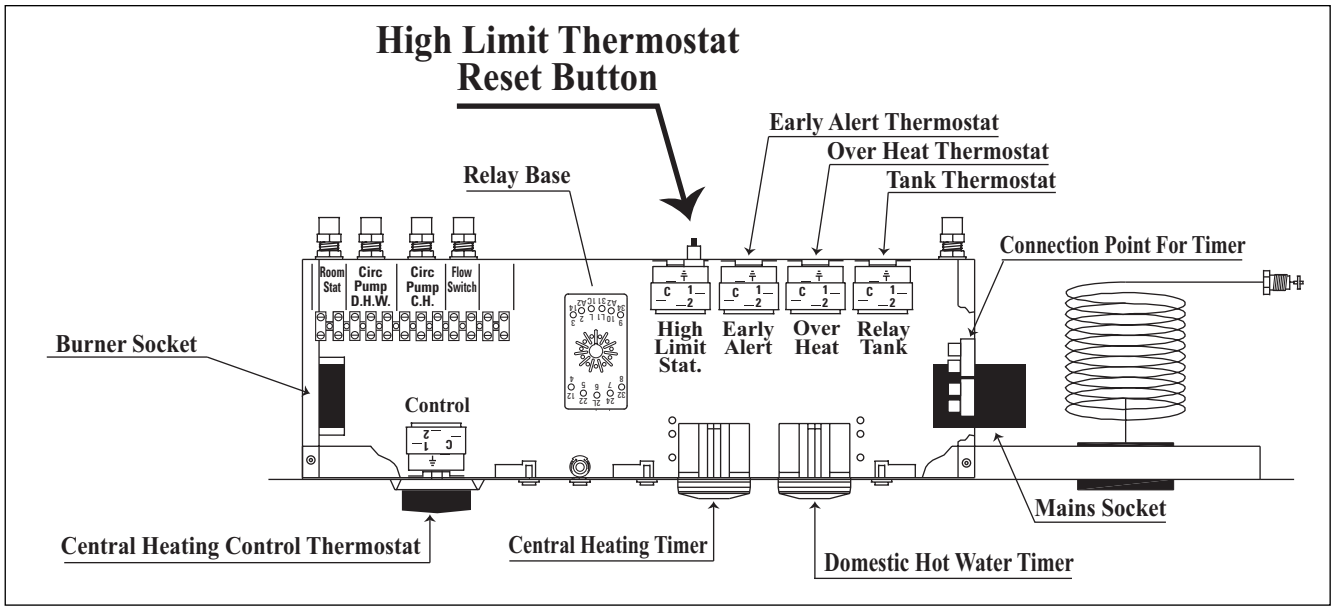

Central Heating Control Thermostat

The control panel is designed for simplicity of use and is equipped with adjustable thermostat dial, optional time controls and limit thermostat reset button as shown above. It also has a built in system pressure gauge which is connected to the boiler and heating system water at the safety valve.

When replacing make sure that each thermostat pocket receives correct phial by marking and noting carefully each phial and its correct pocket.

BOILER THERMOSTATS - FUNCTION

The CONTROL THERMOSTAT [1] on the boiler allows the householder to vary the water flow temperature from a low of 60˚C to a high of 80˚C to 82˚C, depending on the model.

In accordance with EU boiler standards, your boiler is also fitted with a SAFETY HIGH LIMIT THERMOSTAT [2], fixed at 114˚C. This system protects the boiler in the event of the control thermostat failing and keeps the boiler safe. The safety high limit thermostat [2] will shut off the boiler and will require the limit button to be pushed to restart the boiler. If the problem re-occurs, you should call your service engineer.

In cases where the flow from the boiler is down to the heating system, fitting a PUMP OVER RUN THERMOSTAT [3] (A Pipe Stat) is recommended. This is to prevent the residual heat build up in the boiler from unnecessarily activating the high limit thermostat and thus causing nuisance. See Heat Pac Wiring Diagram in Installation Instructions on page 20.

We have factory fitted pump overrun thermostats to the complete rang of Firebird Condensing Boilers.

PLASTIC PIPING - WARNING

The boiler thermostat control and safety system is not designed, and must not be relied on, to protect plastic pipe from overheating. Plastic pipe must never be connected directly to the boiler.

If you choose to use plastic pipe anywhere on your hot water circuits, then please consult the plastic pipe manufacturer for their instructions on how to ensure their product never overheats. Our boiler control and safety high limit thermostats are not designed to fulfil this function. (They may suggest the fitting of independent pipe thermostats, or thermostatic mixing valves linking flow and return).

• ***Firebird accepts no responsibility for failure of plastic piping and fittings for what ever reason.***

TIME AND TEMPERATURE CONTROLS

The Building Regulations state that central heating systems must have time and temperature control on the pipe circuits (eg Thermostatic Radiator Valves / TRVs, Room thermostats, cylinder thermostats etc.) on both fully pumped and semi-gravity systems.

RDB 2.2 Range Burner Settings (K).

Variations in nozzle throughput, flue type & draught, oil viscosity etc. may give results differing from these laboratory performance figures.

KEROSENE SETTINGS for Firebird C Boiler Range Using RDB 2.2 Burner

	Range Kw.	Head Type	Nozzle Size-Type	Pump Pressure bar	Air	Fg. ˚C	CO2	Smoke No	Air Box
C20	15	T1	.4 80˚H	10 bar	0.5	70 avg.	11.5%	0-1	1
	17.5	T1	.5 80˚H	8.6 bar	1.2	70 avg.	12%	0-1	1
	20	T1	.6 80˚H	7 bar	2.0	75 avg.	12%	0-1	1
C26	23	T3	.6 80˚H	9 bar	2.5	75 avg.	12%	0-1	1
	26	T3	.65 80˚H	10 bar	3.6	85 avg.	12%	0-1	1
C35	30.5	T3	.75 80˚S	9 bar	5	90 avg.	12%	0-1	1
	35	T3	.85 80˚S	9 bar	5.8	95 avg.	13%	0-1	1

The above performance figures are based on ideal laboratory test conditions. Air shutter settings above may need to be revised to take into consideration difference in resistances between conventional and balanced flue installations. Use flue gas analyser to achieve optimum results.

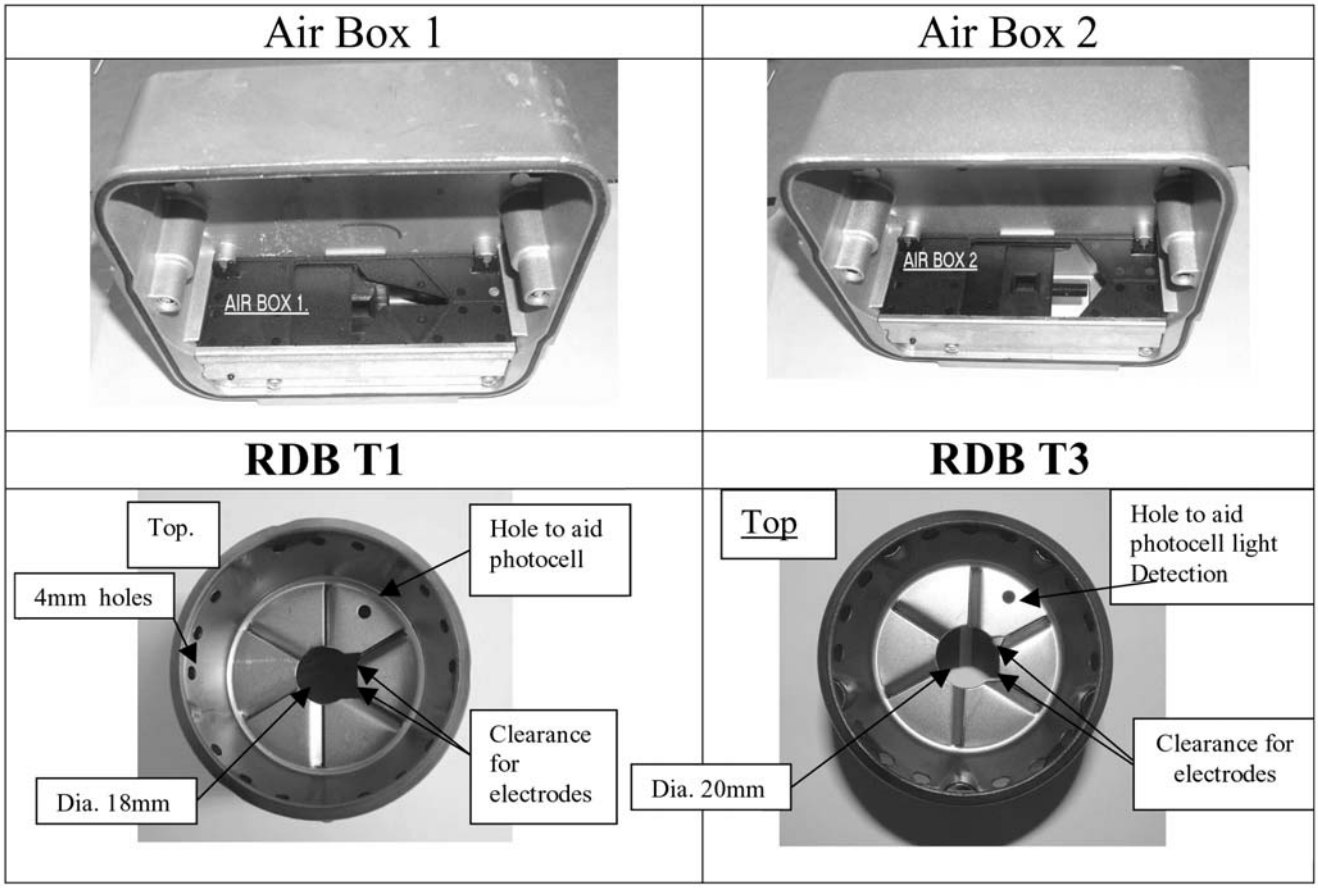

1. BURNER DESCRIPTION

One stage kerosene burner.

The intake air temperature must not be over 70˚.
Burner with CE marking in conformity with EEC directives: EMC 89/336/EEC and Efficiency 92/42/EEC.
CE Certification No.: **0036 0316/01** as 92/42/EEC.

Fig. 1

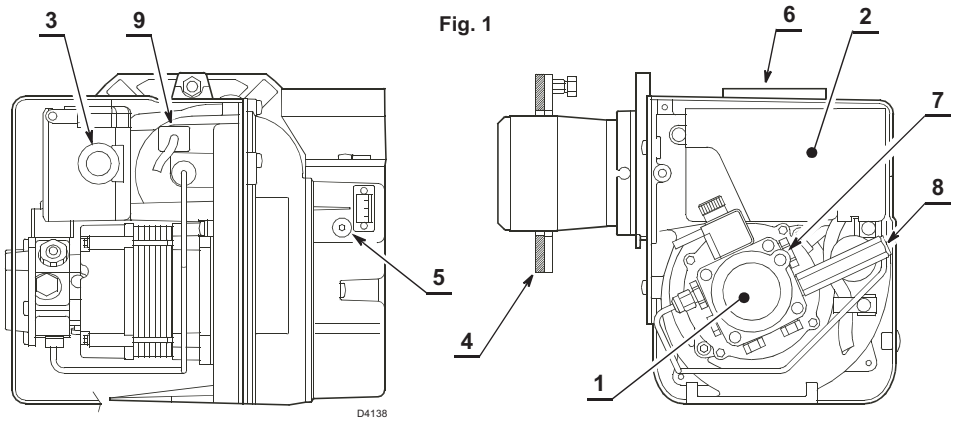

1 - Pump
2 - Control box
3 - Reset button with lock-out lamp
4 - Flange with insulating gasket
5 - Air damper adjustment screw
6 - Snorkel (BF)
7 - Pump pressure adjustment screw
8 - Pressure gauge port
9 - Photoresistance

1.1 BURNER EQUIPMENT

Flange with insulating gasket . . . . . No. 1
Screw and nuts for flange . . . . . No. 1
Hexagonal key . . . . . No. 1
Plastic air cover . . . . . No. 1
Screws for flange to be fixed to boiler . . . . . No. 4
Flexible oil pipes with nipples . . . . . No. 2
Screw of by-pass pump . . . . . No. 1

ELECTRODE SETTING

Riello RDB 2.2

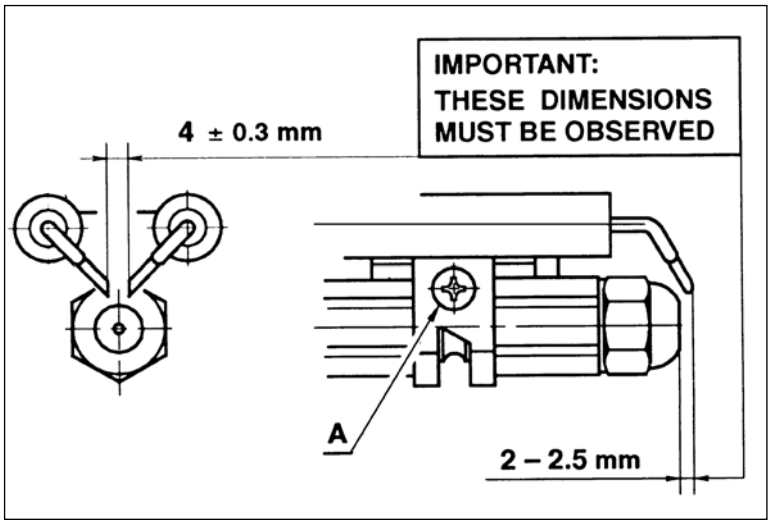

ATTENTION

Before assembling or removing the nozzle loosen screw (A) and move electrodes forward.

Riello Burner Specification

HYDRAULIC SYSTEM

WARNING

The pump is designed to allow working with one pipe.
In order to obtain two pipe working it is necessary to unscrew the return plug (2), screw in the by-pass screw (3) and then screw in return oil line (2). (See fig. 4).
In the two pipes systems, before starting the burner make sure that the return pipe-line is not clogged. An excessive back pressure would cause the damage of the pump seal.

Fig. 4

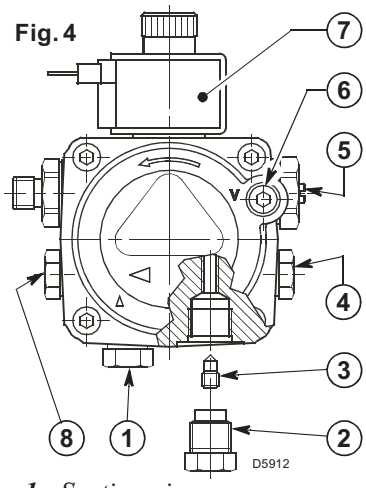

1 - Suction pipe
2 - Return line
3 - By-pass screw
4 - Pressure gauge connection & Bleed screw
5 - Pressure adjuster
6 - Vacuum gauge connection
7 - Valve
8 - Auxiliary pressure test point

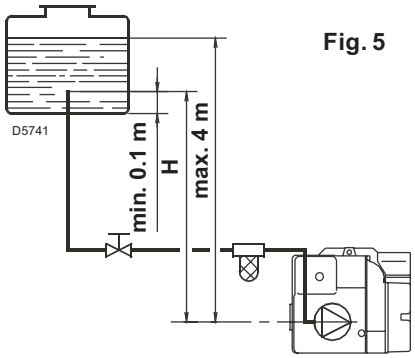

Fig. 5

H meters	L meters	
	I. D. 8 mm	I. D. 10 mm
0.5	10	20
1	20	40
1.5	40	80
2	60	100

PRIMING PUMP:

On the system in fig. 5 it is sufficient to loosen the suction gauge connection (6, fig. 4) and wait until oil flows out.
On the systems in fig. 6 and 7 start the burner and wait for the priming. Should lock-out occur prior to the arrival of the fuel, await at least 20 seconds before repeating the operation.
The pump suction should not exceed a maximum of 0,4 bar (30 cm Hg). Beyond this limit gas is released from the oil. Oil pipes must be completely tight.
In the vacuum systems (fig. 7) the return line should terminate within the oil tank at the same level as the suction line. In this case a non-return valve is not required. Should however the return line arrive over the fuel level, a non-return valve is required. This solution however is less safe than previous one, due to the possibility of leakage of the valve.

H meters	L meters	
	I. D. 8 mm	I. D. 10 mm
0	35	100
0.5	30	100
1	25	100
1.5	20	90
2	15	70
3	8	30
3.5	6	20

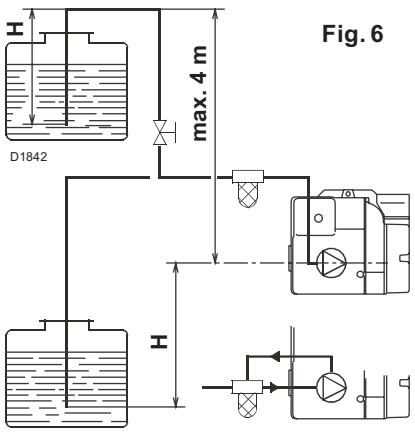

Fig. 6

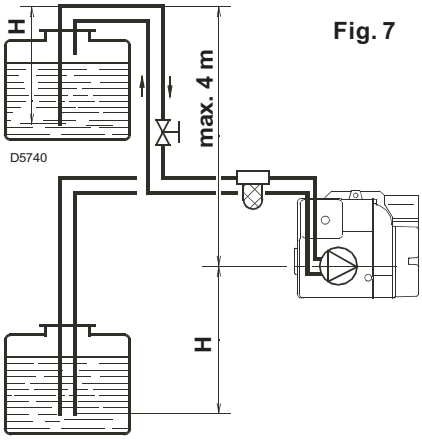

Fig. 7

Check periodically the flexible pipes conditions.
It is necessary to install a filter on the fuel supply line.
H = difference of level **L** = Max. lenght of the suction line **I.D.** = Interminal diameter of the oil pipes.

For Full details on suction line systems please refer to OFTEC Technical Information Sheet T1/139 (T32)

ELECTRICAL SUPPLY

The boiler and controls require 230V 1 phase 50Hz electric supply protected with a 5amp fuse.

THIS APPLIANCE MUST BE EARTHED.

A qualified electrician must carry out all electric wiring in accordance with current I.E.E Regulations and any local regulations which may apply.

The mains electrical supply must be taken from a double pole isolating switch with a 5amp fuse, positioned somewhere close to the boiler. Heat resisting cable must be used which can be routed into the boiler through the access provided on either side of the base.

Ancillary controls may be provided for with terminal connections in the control panel.

Firebird Kitchen C, System C & Heat Pac C' Wiring Diagram

To Dual Temperature Control Thermostat And Safety High Limit Thermostat

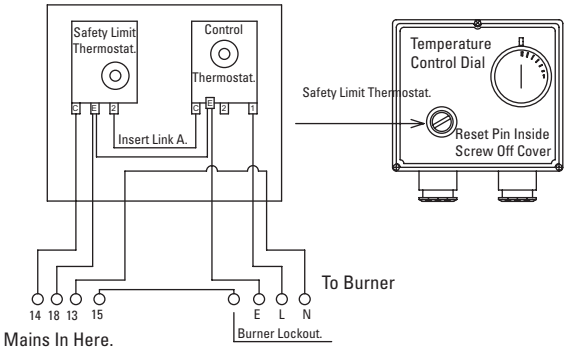

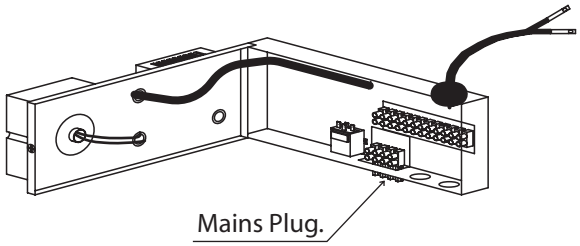

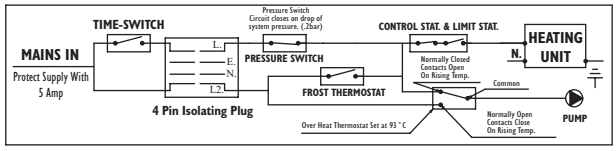

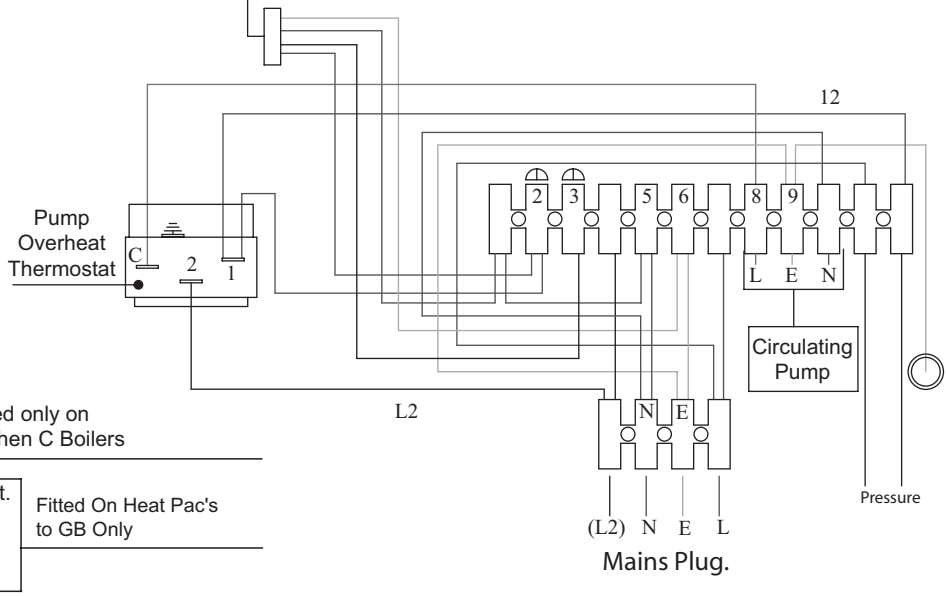

1.Lamp Neutral.
2.Mains On Lamp.
3.Lock out Lamp.
Fitted only on Kitchen C Boilers

4.Permanent Live Frost Stat.
5.Neutral For Frost Stat.
6.Earth For Frost Stat.
7.-Live From Frost Stat.
Fitted On Heat Pac's to GB Only

8.-Power Supply For Pump From Common On Over Heat.
23. - To Pressure Switch.
25.- To Dual Stat. And Burner.
12.- Switch Live To Poll 1 On Over Heat Stat.
L2.- Permanent Live To Poll 2 On Over Heat Stat.
24.-Return From Pressure Switch.

L2.- Permanent Live.
L.- Switched Live.
N.- Neutral.
E - Earth.

Firebird Combi C Wiring Diagrams

figure A.

Combi Wiring Label 13/12/2005

Room Stat. | Circ. Pump C.H. | Circ. Pump D.H.W. | Flow Switch | N

Limit. | Early Alert. | Over Heat.

Burner.

L2 | N | ⏚ | L1

Control.

Lock Out.

Limit.

Hot Water Timer.

Heating Timer.

figure B.

IMPORTANT Re: Wiring Combi C Boiler.

When connecting the Combi to a remote single channel timer, or programmable room stat, or a two way gang timer, follow instructions shown in diagrams.

The Permanent Live to a Combi is needed for an over heat thermostat, and for a Frost Thermostat in the case of the Firebird Combi Pac.

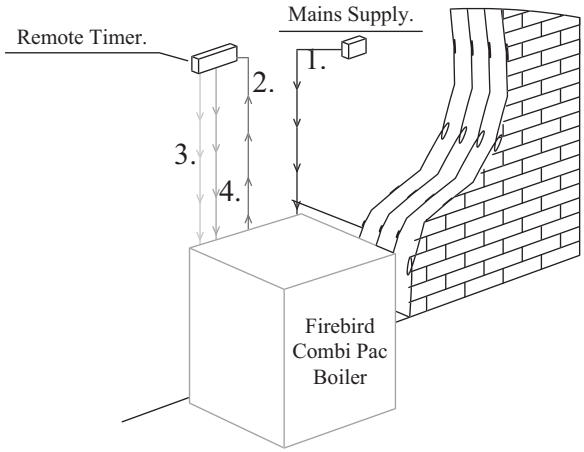

1. Permanent Live To Combi.
2. Live Feed For Timer From Combi.
3. Switch Live For Domestic Hot.
4. Switch Live For Central Heating.

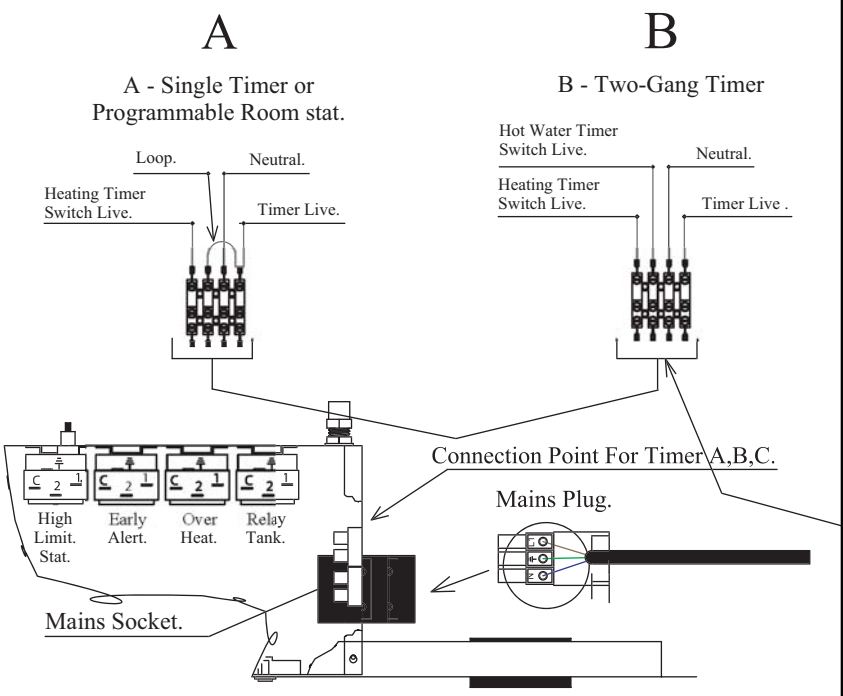

Make sure that the permanent live is connected to the 'mains in' plug and is protected by a **5 Amp. Fuse.**

Heat Resistant Cable **must** be used when connecting power supply to, and from this boiler.

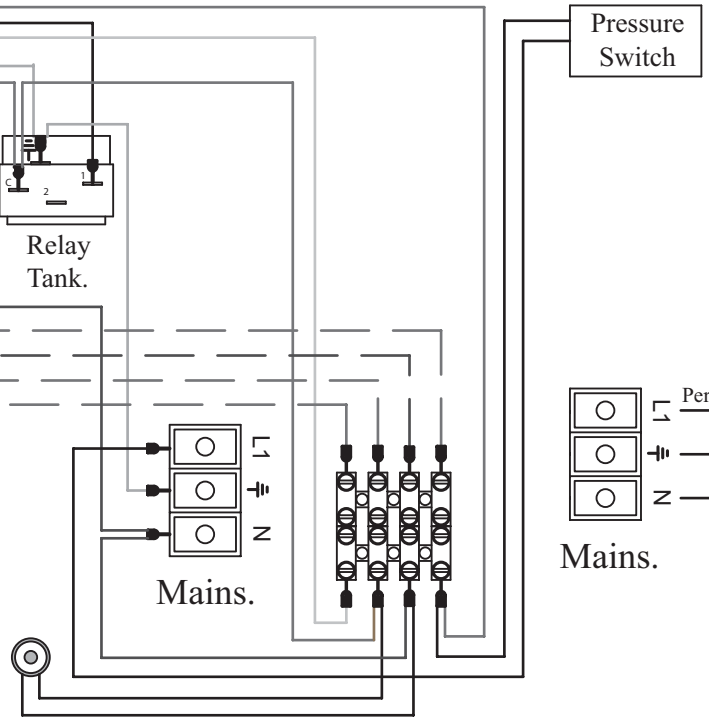

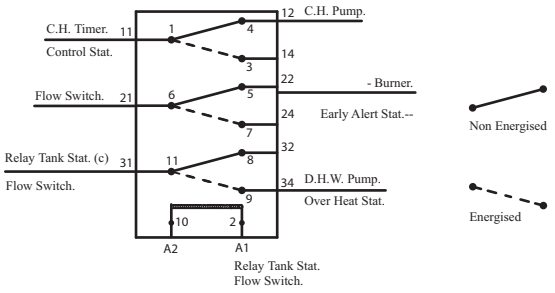

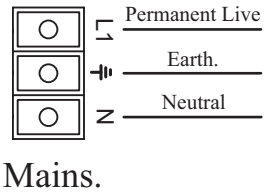

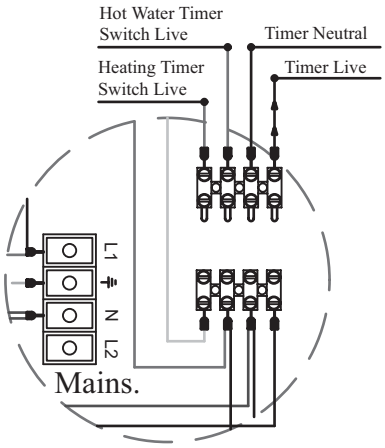

C

C - No Timer

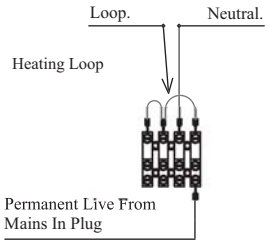

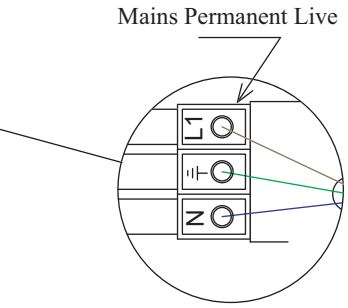

figure C.

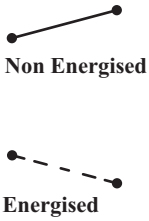

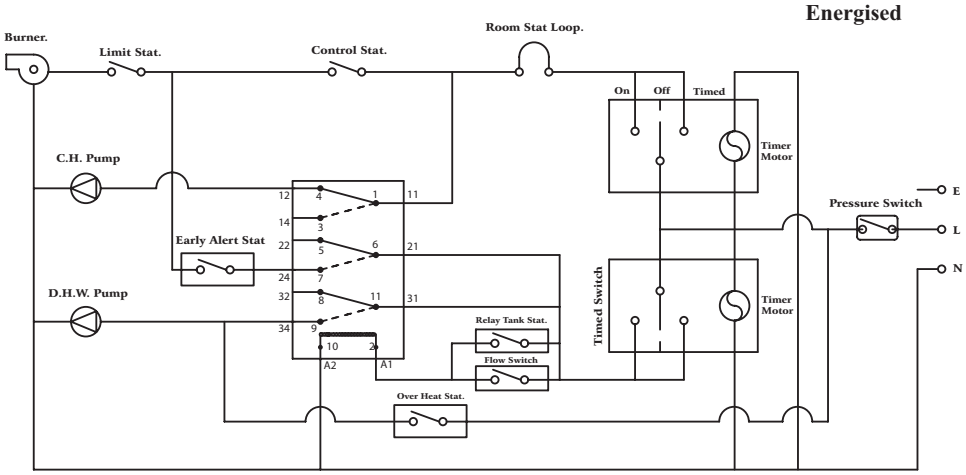

POSITIONING BOILER

Ensure that adequate clearance is available for making the water and flue connections.

As the boiler is serviced from the front, no headroom clearance is necessary but a clearance of 750mm must be available at the front of the boiler.

No special hearth is required as the boiler is fully insulated, but the floor must be level and capable of supporting the weight of the boiler and its water content.

Sound levels must also be a consideration. Whilst the Firebird is one of the quietest boilers on the market, some householders are particularly sensitive and the following points should be considered:

1. Tiled surfaces in a small room will amplify noise - particularly if the wall construction is hollow.
2. If a conventional flue passes through a bedroom it is capable of transmitting noise.
3. Low level balanced flue terminals can produce exhaust noise on the outside terminal and this should be considered when siting near adjacent property.
4. The Firebird Balanced Flue Kit has been specifically designed for Firebird's indoor boilers. The use of third party low level flue kits is not recommended and will affect its warranty.
5. The Siting of the boiler should take into account the disposal of condensate products.

- **It is recommended that a suitable corrosion inhibitor is added to the heating system.**
- **Existing systems should be treated with chemical cleaner and properly flushed before the boiler is fitted and corrosion inhibitor added.**
- **In areas of hard water a suitable descaler would also be recommended.**

CONDENSATE PLUME DISPERSAL

When choosing the location for a condensing boiler, special consideration must be given to the positioning of the flue terminal. Care should be taken to locate it so as to prevent either the end user or their neighbours perceiving the plume to be a nuisance.

It should be noted that the normal statutory clearances required around low level flue terminals (ref. T45 T1/135)may not be sufficient to cope with plume dispersal from a condensing boiler. The following points should be considered: -

1. Plumes can extend out horizontally and can also drift out to the sides and above the terminal. Care needs to be taken, therefore, to avoid the plume reaching adjacent surfaces, particularly windows and neighbours dwellings.
2. Flue terminals need to be located where air can pass freely across them to disperse vapours.
3. The effect of the moisture generated must be considered in relation to the possible corrosion of metal parts it might reach and to the possible formation of ice on pathways in freezing conditions.
4. Keep flue terminals a minimum of 1 m (horizontally) from openings in the building.
5. Do not install flue terminals directly below a window.
6. Do not install flue terminals next to a door.
7. Do not install flue terminals within 1 m of ventilated soffits or eaves.
8. Keep flue terminals at least 1 m away from a surface or boundary facing the terminal.
9. Follow the appliance manufactures instructions.

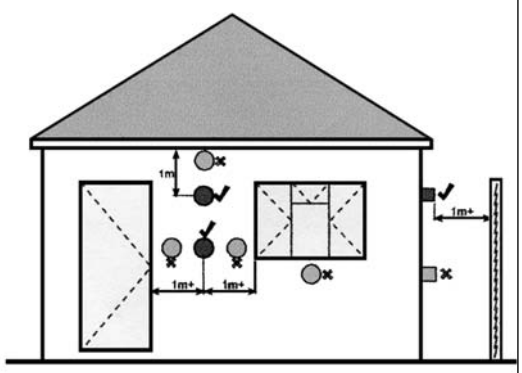

FLUE TERMINAL

CONDENSATE DISPOSAL

IMPORTANT

Firebird condensing boilers when in condensing mode extract more heat from the flue products and the resulting condensate which is mildly acidic needs to be drained from the boiler via a condensate pipe to the drainage system.

Provision must be made for the removal of condensate from the boiler to a internal soil stack, waste pipe, external soil stack, gully or soak-away as per BS6798.

The 75mm trap is provided with the boiler and situated on the front of the boiler (below the pressure vessel where fitted) as per **figure 1**. This should be checked at regular intervals and cleaned at annual service.

The condensate line should be plastic and minimum diameter of 22mm.

Copper or steel can not be used.

A fall from the boiler of 1:40 minimum.

As few bends as possible to reduce the risk of trapping condensate.

Condensate pipework that is external or in an unheated garage should not exceed 3 meters and lagged with water proof insulation to prevent freezing.

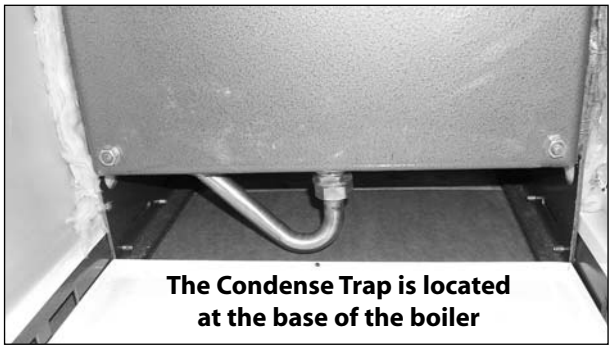

The Condense Trap is located at the base of the boiler

PRIMING CONDENSE TRAP

IMPORTANT

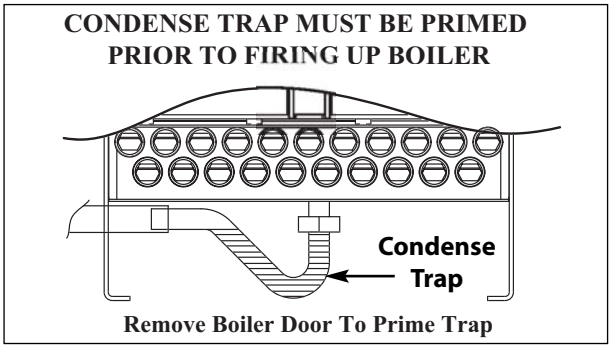

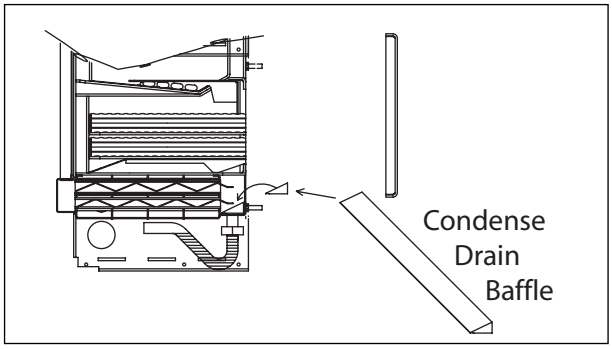

figure 1.

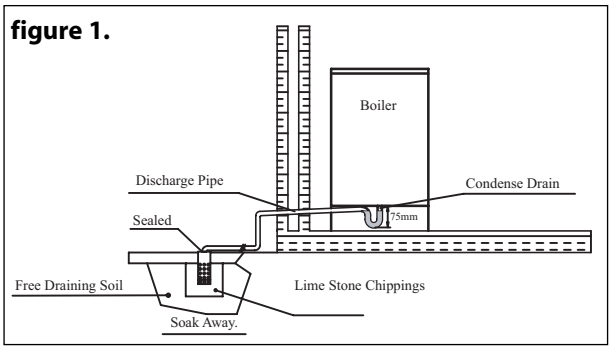

figure 2.

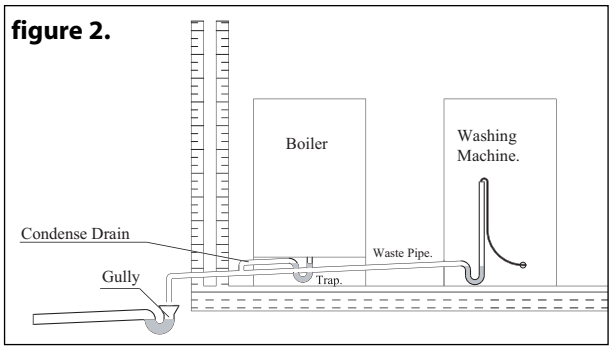

figure 3.

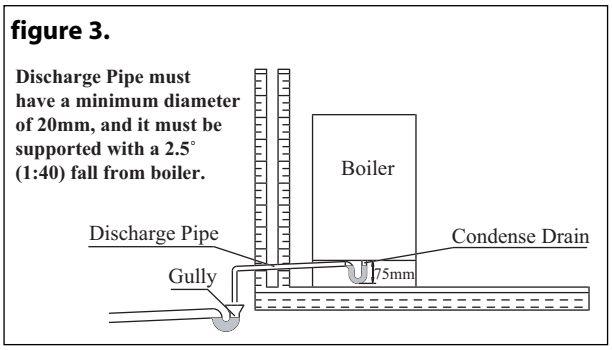

figure 4.

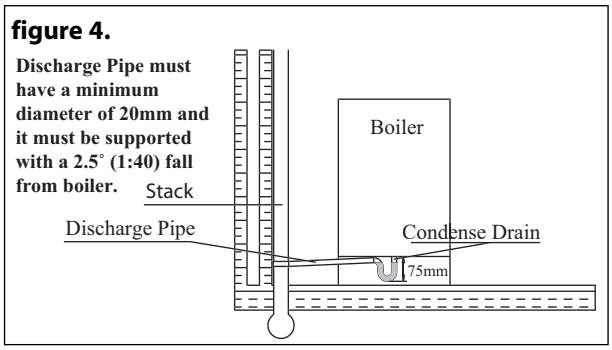

CONVENTIONAL FLUE SYSTEMS

IMPORTANT

The Firebird condensing boiler **must not** be installed with existing flue systems. A flue system suitable for wet flues must be used. If a flue system which is unsuitable is used it **will invalidate the warranty.**

Because of the high operating efficiencies of the Firebird condensing boilers and low flue gas temperatures, it is necessary to pay extra special attention to the flues and chimneys.

Existing chimneys must be lined with 100mm internal diameter twin skin flexible **smooth bore liner** (stainless steel), certified as suitable for condensing oil boilers by flue manufacturer.

Twin wall insulation must be used for external applications, with **seals** and stainless steel inner skin.

Only vitreous enamel or high grade stainless steel can be used between boiler and chimney in an internal installation, aluminium or asbestos type material **must not be used.**

Condensate must be able to run back into the flue chamber of the boiler and not escape, as up to 1.5 ltr. of condensate can be produced in a conventional flue. No trap is required in the flue system.

The terminal must be positioned to avoid combustion products entering the building and as per Building Regulations. **Refer to BS5410:1 OFTEC installation requirements books one and two.**

Every individual concerned with any aspect of installation should be deemed as competent, and be aware of all current National and Local Government Standards and Building & Installation Regulations.

CONVENTIONAL BRICK CHIMNEY WITH LINER

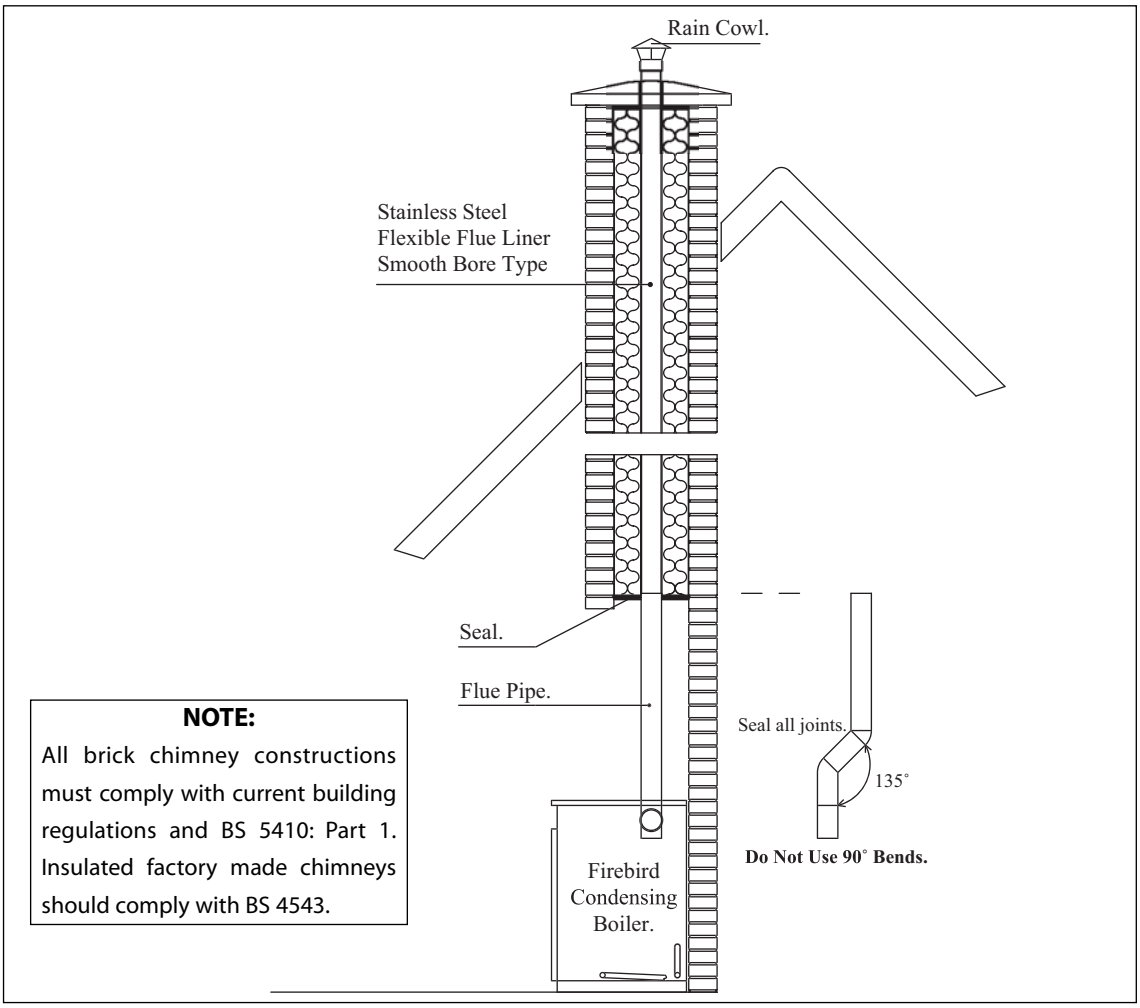

NOTE:
All brick chimney constructions must comply with current building regulations and BS 5410: Part 1. Insulated factory made chimneys should comply with BS 4543.

BALANCED FLUE SITING

A. Horizontal from opening, airbrick, opening window etc.

B. From an internal or external corner.

C. Below an opening, airbrick, opening window etc.

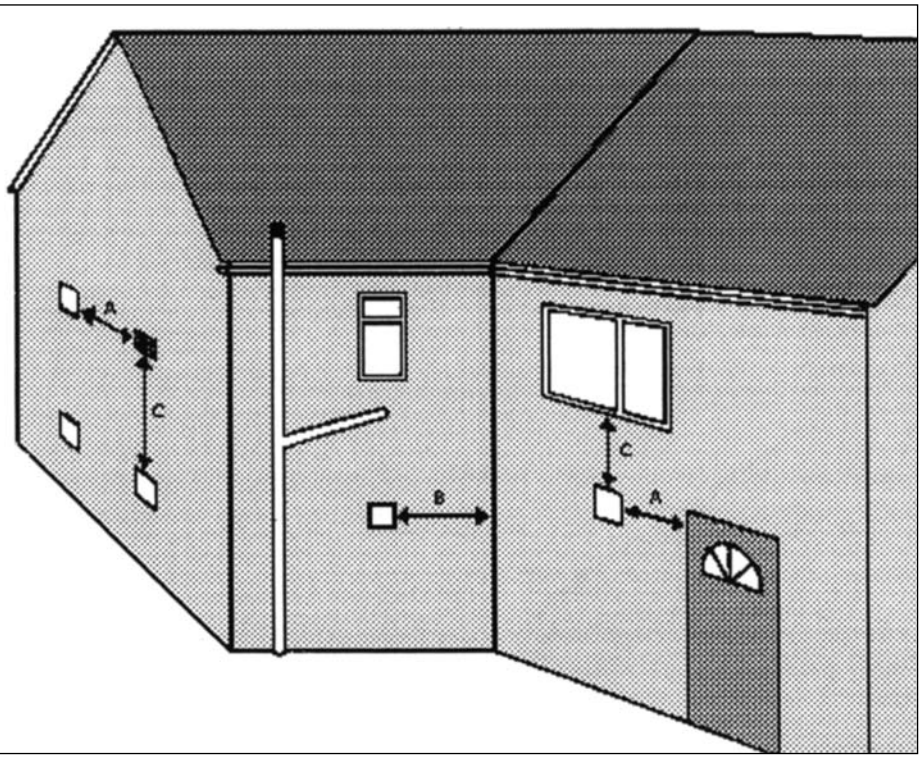

Information supplied by OFTEC
Book three Aug. 2002
See note at foot of page

Notes:

1. The terminal should be positioned to avoid combustion products entering the building or accumulating in stagnant pockets around buildings.

2. The terminal must be protected by a guard if it is less than 2 metres above ground level or in a position where any person has access to it (i.e. a balcony).

3. A heat protection shield should be fitted if the terminal is less than 850mm from a plastic or painted gutter or less than 450mm from painted eaves.

* **FIREBIRD RECOMMENDS AS PER OFTEC RECOMMENDATIONS THAT THE FLUE SHOULD BE A MINIMUM DISTANCE OF 1 METRE FROM OPENINGS SO THAT IT DOES NOT CAUSE A NUISANCE AND PERMITS THE DISPERSAL OF COMBUSTION PRODUCTS. (SEE PAGE 19)**

Building Regulations

BUILDING REGULATIONS	A	B	C
Northern Ireland 1990	600	600	600
Republic of Ireland 1997	600	600	600

*Where the terminal is within 1 metre of any plastic material, such material should be protected from the effects of combustion products of fuel. There are additional general requirements in most Regulations and Standards that the flue must be positioned so that it does not cause a nuisance and permits the dispersal of combustion products.

NOTE: The Buildings Regulations clearances shown above are minimum allowed. To take account of prevailing site conditions it is advisable wherever necessary to follow the manufacturers preferred recommendation. If in doubt contact manufacturer for advice.

ALWAYS CHECK FOR ANY BUILDING REGULATIONS AMENDMENTS WHICH MAY HAVE BEEN ISSUED AFTER THE PUBLICATION OF THIS MANUAL

Clearances advised by the BRITISH STANDARDS for Open Flues, Low Level Balanced Flues and Balanced Flues fitted to Oil Fired Boilers.

THESE ARE ALSO THE BUILDING REGULATIONS FOR ENGLAND, WALES & SCOTLAND

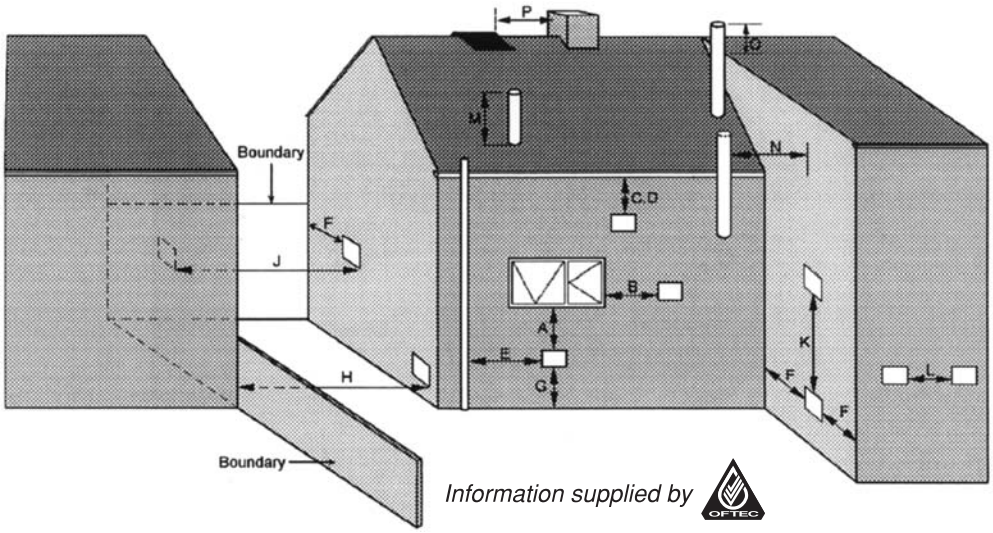

Minimum distances to terminals in millimetres as measured from top of the chimney or the rim of a low level discharge opening.

	APPLIANCE BURNER TYPE	PRESSURE JET	VAPOURISING
A	Directly below an opening, air brick, opening window etc *	600	Not allowed
B	Horizontally to an opening, air brick, opening window etc *	600	Not allowed
C	Below a gutter, eaves or balcony with protection *	75	Not allowed
D	Below a gutter or a balcony without protection	600	Not allowed
E	From vertical sanitary pipework	300	Not allowed
F	From an internal or external corner or surface or boundary alongside the terminal	300	Not allowed
G	Above ground or balcony level	300	Not allowed
H	From a surface or boundary facing the terminal	600	Not allowed
J	From a terminal facing the terminal	1200	Not allowed
K	Vertically from a terminal on the same wall	1500	Not allowed
L	Horizontally from a terminal on the same wall	750	Not allowed
M	Above the highest point of an intersection with the roof	600	1000
N	From a vertical structure on the side of the terminal	750	2300
0	Above a vertical structure less than 750mm from the side of the terminal	600	1000
P	From a ridge terminal to a vertical structure on the roof	1500	Not allowed

These notes form an integral part of the information shown above.

1. Terminals should be positioned so as to avoid products of combustion accumulating in stagnant pockets around the building or entering into buildings.
2. Appliances burning Class D oil have additional restrictions.(See 1.7.3 in Oftec Book 3 - Aug. 2002)
3. Vertical structure in N, 0 and P include tank or lift rooms, parapets, dormers etc.
4. Terminating positions A to L are only permitted for appliances that have been approved for low level flue discharge when tested to OFS A100 or A101.
5. Terminating positions must be at least 1.8 metres distant from an oil storage tank unless a wall with at least 30 mins fire resistance and extending 300mm higher and wider than the tank is provided between the tank and the terminating position.
6. Where a flue is terminated less than 600mm away from a projection above it and the projection consists of plastic or has a combustible or painted surface, then a heat shield of at least 750mm wide should be fitted to protect these surfaces.
7. For terminals used with vapourising burners, a horizontal distance of at least 2300mm is required between the terminal and the roof line.
8. If the lowest part of the terminal is less than 2 metres above the ground, balcony, flat roof or other place to which any person has access, the terminal must be protected by a guard.
9. Notwithstanding the dimensions given in the drawing and table, a terminal should not be sited closer than 300mm to combustible material.

BALANCED FLUE BOILERS

The Firebird boiler may be set for Room-sealed balanced flue operation using a Firebird condensing balanced flue kit. This kit does **not** draw **combustion air** from inside the room. **It is drawn from outside direct to burner by airpipe supplied with boiler.** Flue gases are expelled expelled through the same kit. However, if the boiler is installed in a **compartment** or **small room**, some **ventilation air** is necessary to maintain acceptable temperature in boiler area.

Balanced flue boiler in room (eg. kitchen) does not require individual ventilation.

BALANCED - FLUE BOILERS IN COMPARTMENTS

Information supplied by OFTEC

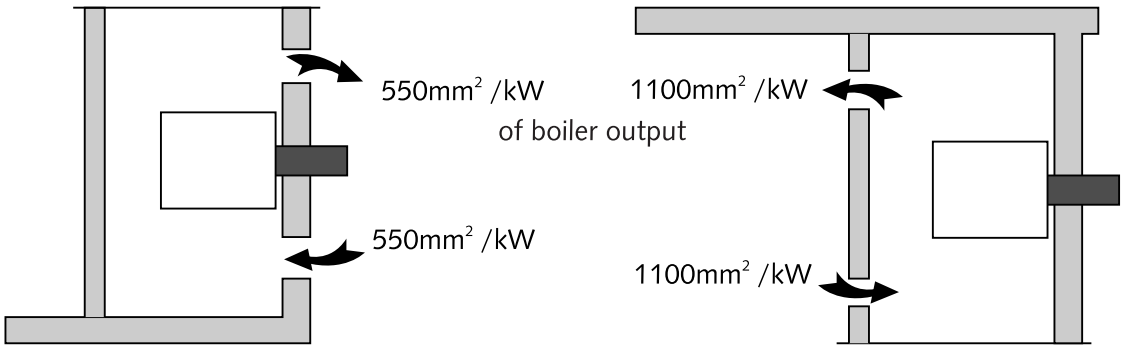

COMPARTMENT VENTILATED FROM OUTSIDE

COMPARTMENT VENTILATED FROM ROOM

Use of any equipment other then the matching Firebird low level roomsealed concentric flue kit is not guaranteed for low level discharge and will probably invalidate the warranty.

DOMESTIC HEATING & HOT WATER SYSTEMS

HVCA Codes of Practice and BS 5449: Part 1 "Forced Circulation Hot Water Systems" should be adhered to when installing the boiler. Refer also to Regulations and Standards listed on **page 2.**

ELECTRICAL SUPPLY

The boiler and controls require 230V 1 phase 50Hz electric supply with a 5amp fuse.

THIS APPLIANCE MUST BE EARTHED.

A qualified electrician must carry out all electric wiring in accordance with current I.E.E Regulations and any local regulations which may apply.

The mains electrical supply must be taken from a double pole isolating switch with a 5amp fuse, positioned somewhere close to the boiler. Heat resisting cable must be used which can be routed into the boiler through the access provided on either side of the base.

Ancillary controls may be provided for with terminal connections in the control panel.

Ventilation and Combustion Air

Conventional Flue Boilers
An adequate supply of **combustion and ventilation air** is essential for efficient and safe boiler operation and the openings for this should be positioned to cause least possible draught, **with no possibility of being accidentally blocked.**

Please note: The British Standard Code of Practice for Oil Firing BS5410: Part 1, requires a permanent air inlet opening of **550mm² per kW (above 5 kW)** of boiler rated output. (Note: 1kW = 3412 Btu/h).

Also, when the boiler is installed in a compartment or confined space, **ventilation** openings are required to ventilate and to avoid overheating in the boiler area.

Combustion & Ventilation air supply for conventional open flue boilers

The figures shown are free areas of grilles in mm² per kw of appliance rating (output).

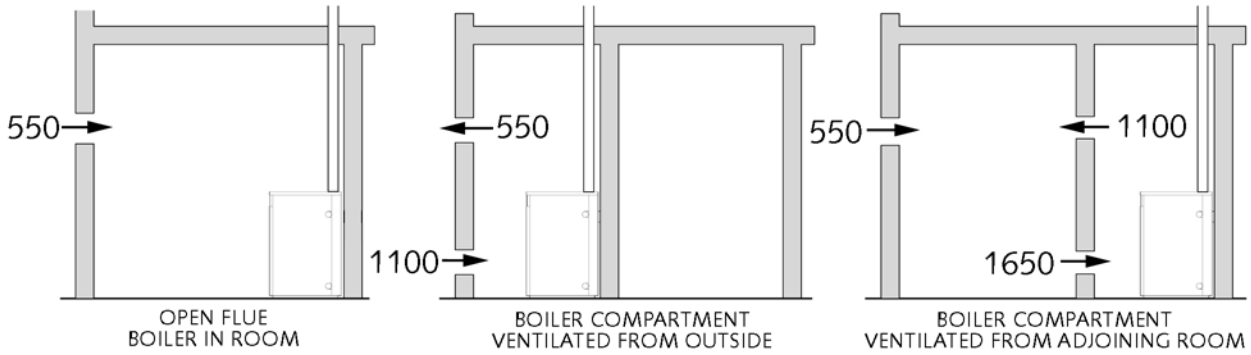

Information supplied by OFTEC

FULL TEXT of both BS 5410 Part 1: 1997 and appropriate Building Regulations for each country should be obtained and fully applied

N.B. Please Carefully Note:

A. For boiler installations in domestic garages in Scotland, Part F of Building Regulations permits **only** Room Sealed appliances to be used (Ref. OFTEC Bk. Three May 1999 page 1 (18).

B. Technical annex T1/127 to OFTEC Book Three, May 1999 page 2 (19) Para. 1, 2 states "In Scotland and the Republic of Ireland **only** Room Sealed Balanced Flue Appliances can be used in that location" (i.e. domestic garages).

Definitions

Combustion Air : Air required directly by boiler oil burner for combustion process.
Ventilation Air : Air required in room for ventilation, cooling, etc. and to promote a healthy living environment.

HEAT PAC, SYSTEM PAC & COMBI PAC - Condensing Concentric Flue Assembly.

Please follow all instructions and Building Regulation extracts supplied with boiler.

(A.)

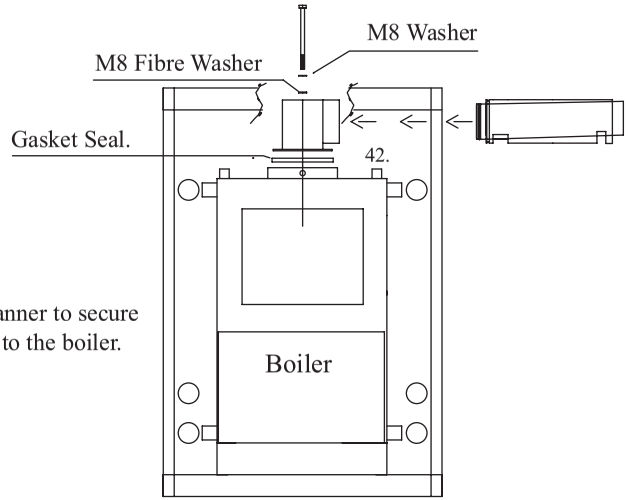

Use an M13 Spanner to secure the flue adaptor to the boiler.

(B.)

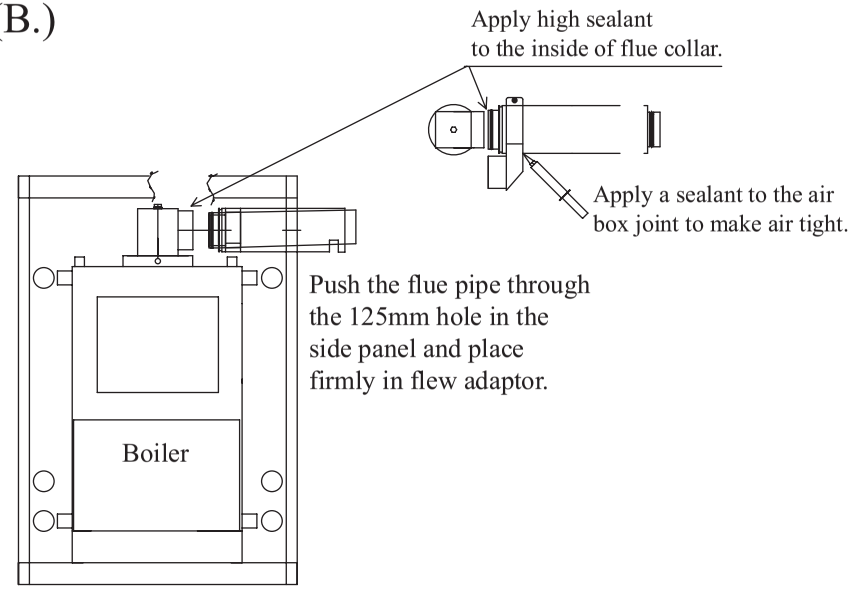

(C.)

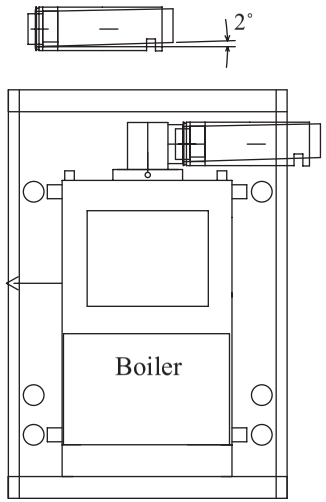

IMPORTANT:
Always ensure that the inner flue pipe has a 2 degree fall back to the boiler.

(D.)

For Left Hand Flue option rotate flue adaptor and swap removable side panels.

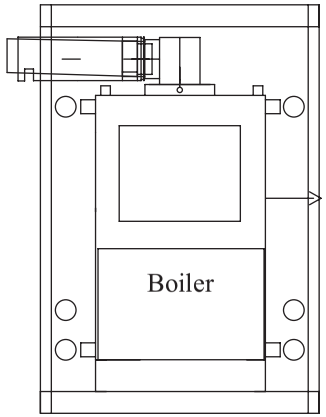

Condensing Concentric Flue Assembly. Please follow all instructions and Building Regulation extracts supplied with boiler.

(A.)

Use an M13 Spanner to secure the flue adapter to the boiler.

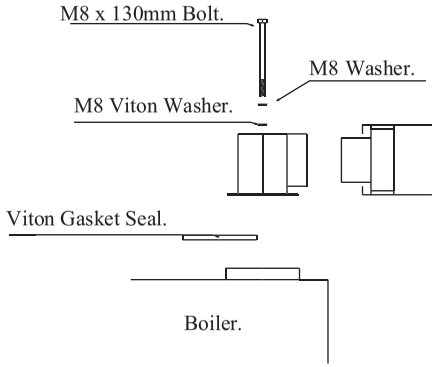

(B.)

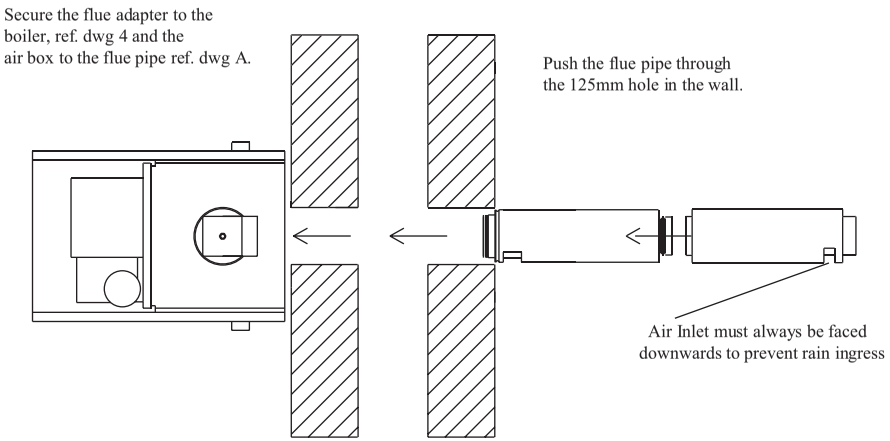

Maximum Length of Flue 1.5 metre. **2° Fall Back To Boiler**

(C.)

Apply high temperature sealant to the inside of flue collar.

Dwg 3.

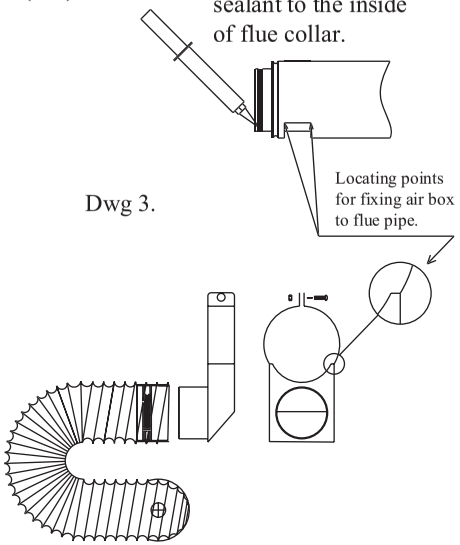

(D.)

(1) Attach the air box to flue pipe.

(2) Apply a sealant to the air box joint to make air tight.

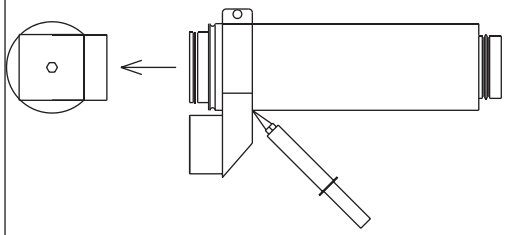

(E.)

(3) Push the flue adapter in to flue collar.

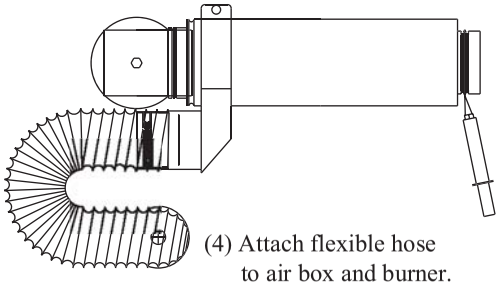

(4) Attach flexible hose to air box and burner.

(F.)

Push the flue pipe through the 125mm hole in the wall. Secure the flue adapter to the Boiler.

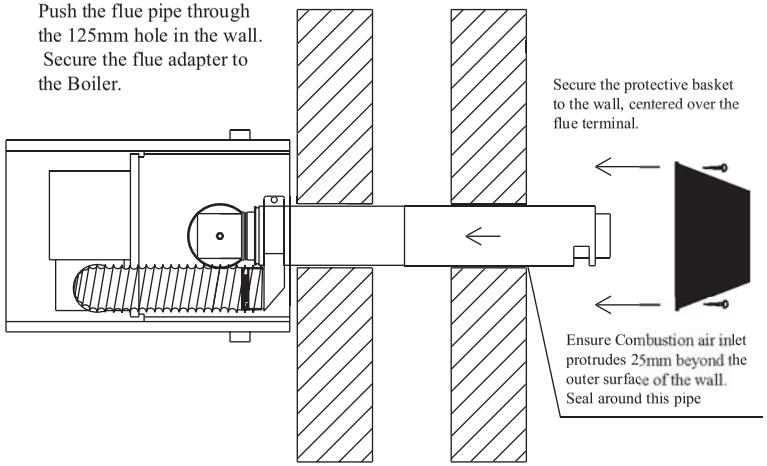

Condensing Concentric Balanced Flue Assembly. Please follow all instructions and Building Regulation extracts supplied with boiler.

Back Outlet

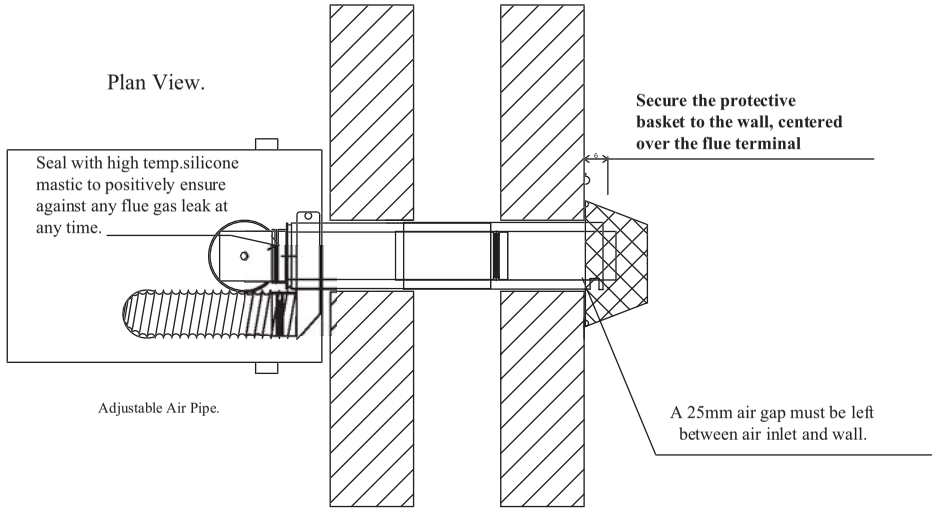

Right Hand Outlet

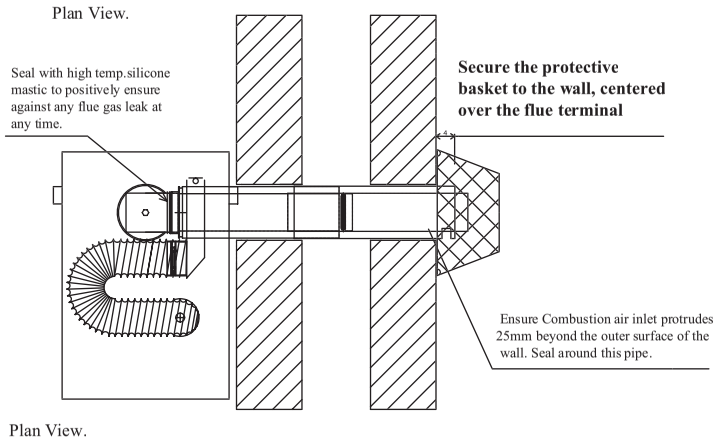

Left Hand Outlet

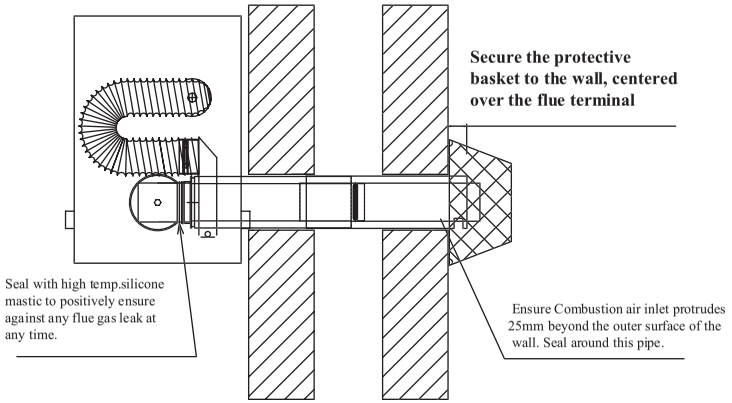

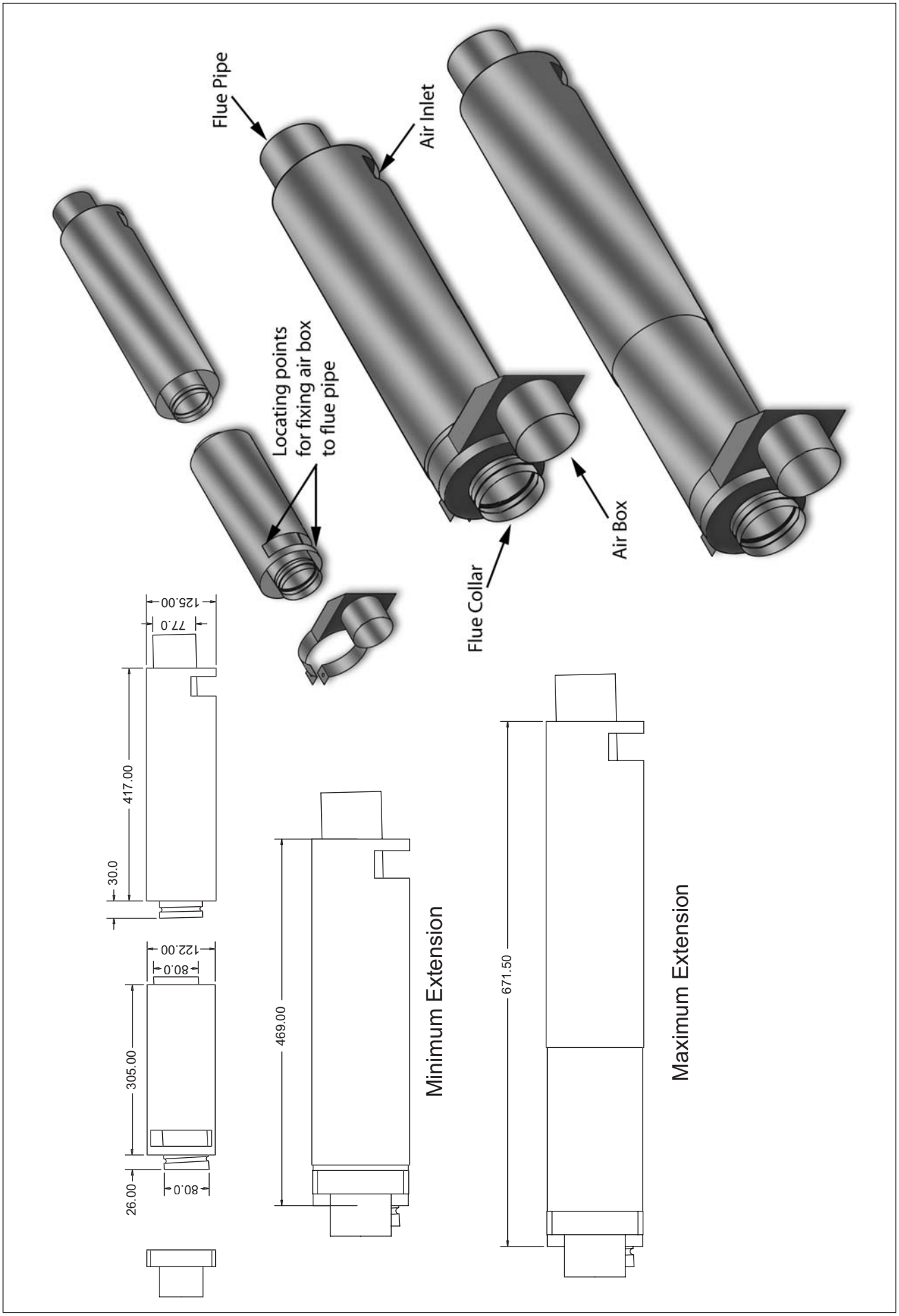
Flue Pipe
Air Inlet
Locating points
for fixing air box
to flue pipe
Flue Collar
Air Box
125.00
77.0
417.00
30.0
122.00
80.0
305.00
26.00
80.0
469.00
Minimum Extension
671.50
Maximum Extension

HIGH LEVEL BALANCED FLUE SYSTEMS

HIGH LEVEL KIT CONTENTS

A Boiler Adapter
B 1000mm length
C 90° bend
D Terminal
Adjustable 300mm - 500mm

Please note:
Maximum flue length = 4 metres
90° bend equivalent to
1 metre length

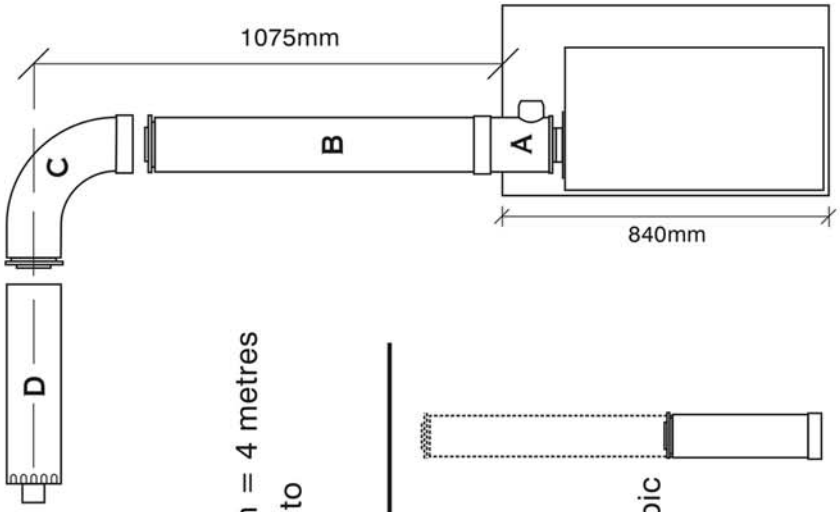

VERTICAL KIT CONTENTS

A Boiler Adapter
B&C 1000mm length
D Roof Terminal 1000mm

Please note:
Maximum flue length 6 metres 50-70
6 metres 70-90
5 metres 90-120
Overall length must take into account
45° bend = 500mm length

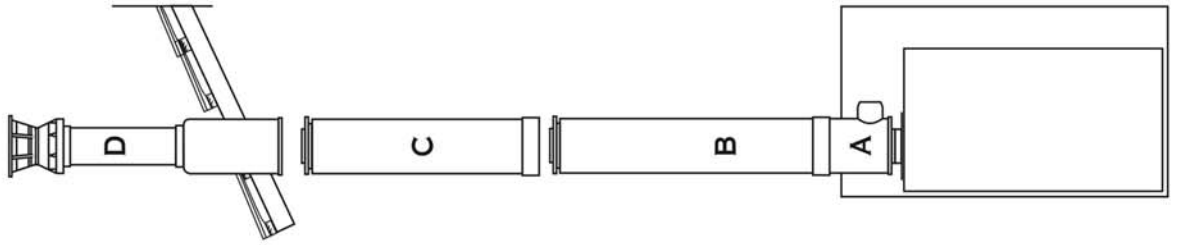

EXTENSION EXTRAS

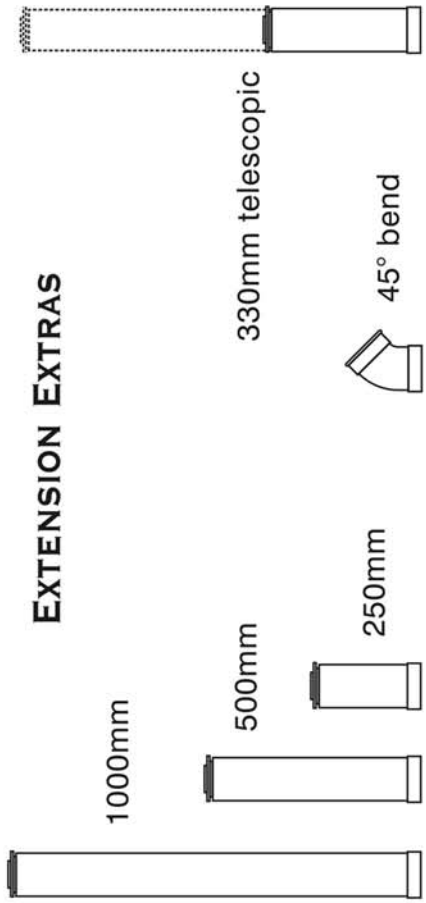

FLUE INSTALLATION INSTRUCTIONS

FLUE INSTALLATION INSTRUCTIONS

45° Elbow 90° Elbow Extension Pieces (0.25m, 0.50m, 1m)

For maximum permissible flue runs see page 20.

Typically the figure given is the flue distance from the boiler to the terminal (not inclusive of terminal). A 45° elbow is given a straight equivalent of 0.5 metres and a 90° elbow is given a straight equivalent of 1.0 metre, and consideration has already been given to the diameter of the flue to be used.

(i.e. Boiler X has been given a maximum flue run of 6 metres using a 100mm flue and 10 metres using a 125mm flue.)

For long flue runs it may be necessary to fit a condensation drain. Please consult the boiler manufacturer's handbook.

Installation of Firebird Flues

For best results using Firebird flues it is recommended to work from the terminal back to the boiler. All Firebird components are designed to be push fit. The components have male fittings one end and female fittings the other. The female fitting should always be facing towards the terminal. The straight extension pieces can be dis-assembled to help installation. The inner component should be firmly pushed onto the bottom of the previous piece until is it sat firmly home (see fig. 1). The outer component can then be slid over the inner component and pushed onto the previous piece (see fig. 2).

fig. 1

fig. 2

Cutting Firebird Flues

Sometimes flue components need to be cut. We recommend that the piece requiring cutting should be dis-assembled. The inner piece should be cut using a sharp hack saw, taking care that the piece be cut square. To help, the inner piece should be 95mm longer than the gap between the two components to be joined. This 95mm is approximately the depth of the sockets. The outer should be 20mm shorter than the inner component. Once the cutting is finished, take care to remove all sharp edges and burrs as this can damage the inner seals upon assembly.

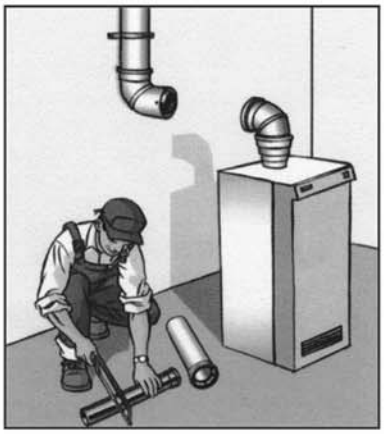

fig. 3

Support

All Firebird flues require support by use of brackets. It is recommended to use one bracket per metre of horizontal flue and one bracket per 2 metres of vertical flue. Brackets should be located directly under the socket section of the pipe work, where possible. Any flue run less than 90° should be treated as horizontal.

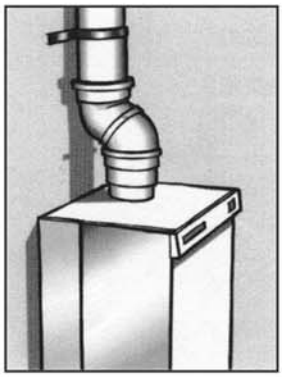

fig. 4

OIL STORAGE TANK SITING

Consult OFTEC Manuals

It is very unlikely that a fire should start from a domestic oil tank, however it does need to be protected from a fire which may originate in a building nearby. For this reason, the tank should be located at least 1.8 metres from any building and no closer than 760mm from any boundary. If it must be closer than 1.8 metres, the building wall should not have any openings other than ventilation openings. In addition, the wall should have at least 30 minutes fire resistance and extending 300mm higher and extends 300mm beyond both ends of the tank is provided between the tank and the terminating position and the wall should have a half hour resistance to an internal fire and extend 1.8 metres from any part of the tank.

A non-combustible radiation barrier is an alternative but this must meet the requirements of BS 5410 Part 1: 1997, "clause 28" Section 6.4.

Steel tanks must be mounted on brick or block piers with a waterproof membrane between the piers and tank.

See Oftec Technical Information T19

Oil storage tanks should not be sited within 1.8m of boiler flue outlets.

Do not allow household waste or hot ashes container in vicinity of oil storage tank or boiler flue outlet.

FLEXIBLE OIL PIPE(S)

A flexible burner oil hose is supplied with the boiler which must be wholly contained with in the appliance case.

Please note: A filter must not be fitted inside the boiler and all joints in the oil line MUST BE OIL-TIGHT. Soldered joints are not permissible. Before connecting to the boiler always flush the complete oil supply line and ensure that oil supply is completely clean and free of any dirt or foreign matter.

SINGLE PIPE SYSTEM

Where installations have the bottom of the tank above the oil burner, a single pipe system may be used.The oil burner should then be set for single pipe operation - **See also manufacturers oil burner manual**

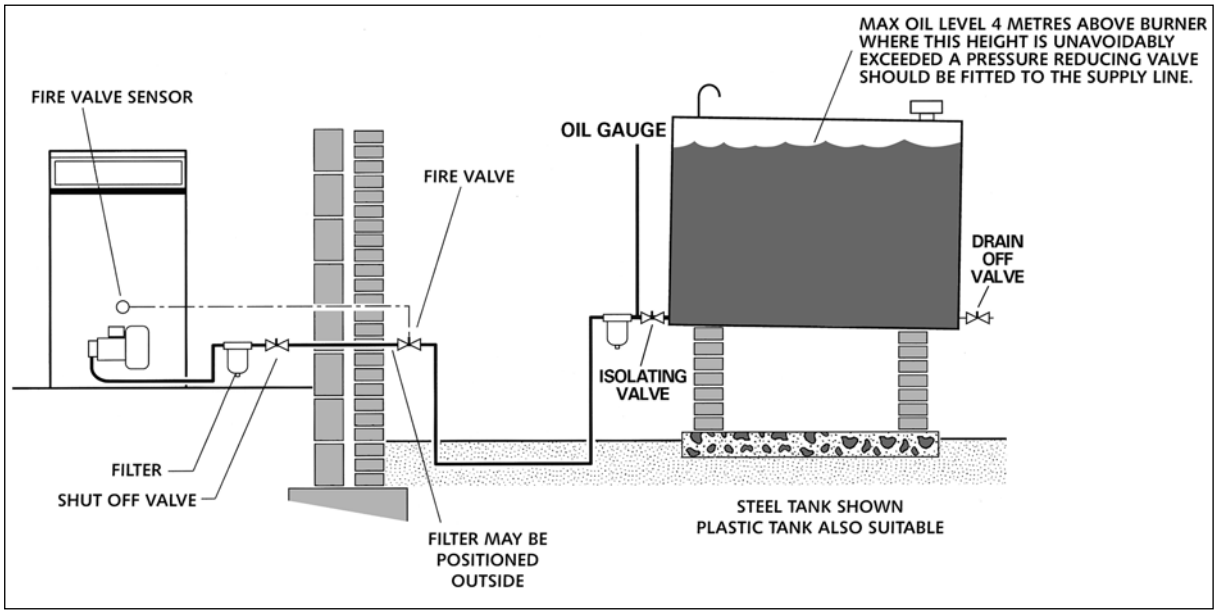

TWO PIPE SYSTEMS

Where installations have the bottom of the tank below the oil burner pump a two pipe system is required. Ensure that valves and filters are not fitted in the return line as this must be unobstructed at all times.

The oil burner pump should be set for two pipe operation as detailed in accompanying oil burner manufacturers manual, refer also to **page 15** of this manual.

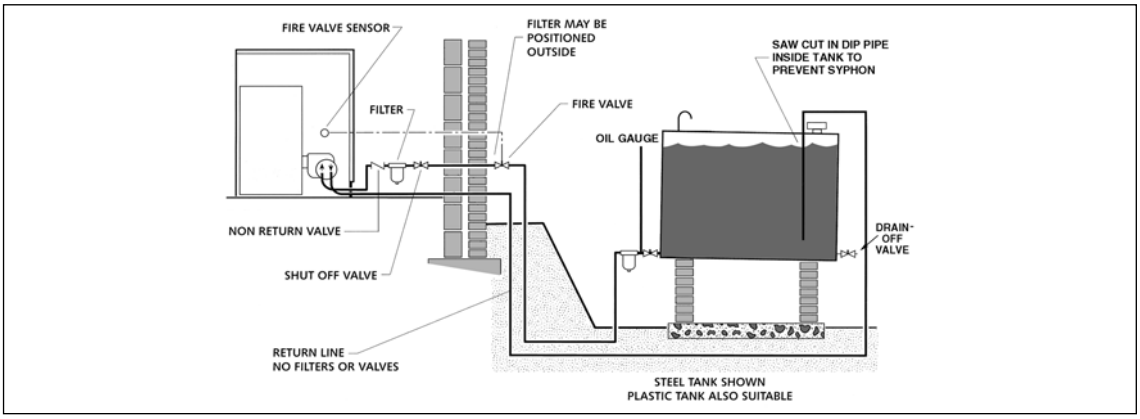

TIGERLOOP SINGLE PIPE SYSTEMS

IMPORTANT: The Tigerloop should not be fitted inside the dwelling -
See TI/139 drawing below and OFTEC manual book 3 page 2(8:1)

Where installations normally require a two pipe system but have long or impractical return line runs, a 'Tigerloop' De-aerator can be used which removes air from a single - pipe - lift oil feed. Higher lift heights can be achieved than are possible with conventional two pipe systems.

The oil burner pump should be set for two pipe operation.

INDIVIDUAL TIGERLOOP INSTRUCTIONS MUST BE IMPLICITLY FOLLOWED.

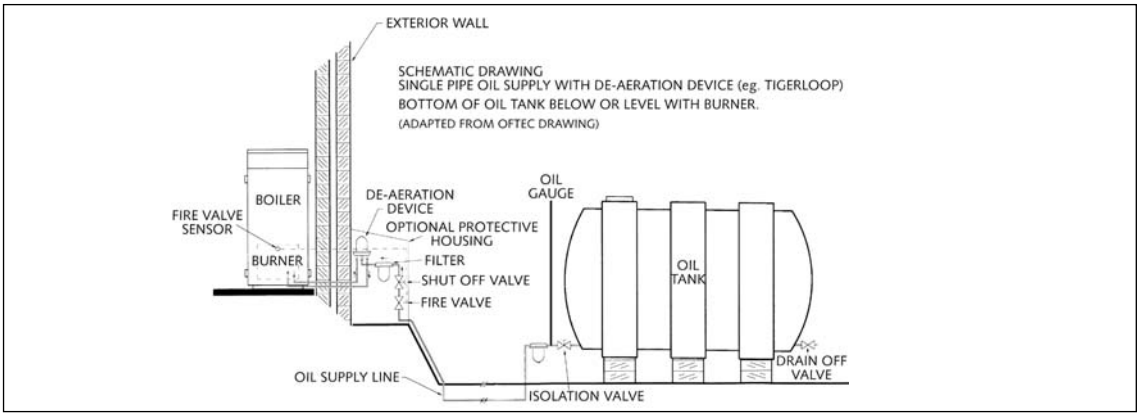

FIRE VALVES

A fire valve is an essential part of the oil supply system. It should be capable of cutting off the flow of oil outside the building in the event of a fire starting up within the boiler. The valve should be located just outside the building at the point where the oil supply line enters. It must be activated by a remote sensor located over the burner, but in a position clear of any direct radiation or excessive heat.

IMPORTANT: Fire Valves should comply with **OFTEC Standards OFS E101**
Fitting of Fire Valves should comply with **BS : 5410 Part 1**

REGULATIONS & STANDARDS

In **England and Wales,** installation in single family dwellings have to comply with the building Regulations Part J. This requires compliance with BS 5410 : Part 1 : 1997. All tanks either deemed to be at risk or with a capacity of more than 2,500 litres will require to be bunded.

For installation in **Scotland,** Building Standard Part F applies. This requires compliance with BS 5410 : Parts 1 and 2. All tanks either deemed to be at risk or with a capacity of more than 2,500 litres will require to be bunded.

Those externally installed tanks with a capacity of less than 2,500 litres will require a bund if located not more than 50 metres from a spring or bore hole, 10 metres from controlled waters and additionally where it may constitute a hazard.

The above risks and hazards are described in OFTEC Technical Information Note TI/133.

In **Northern Ireland,** the Building Regulations do not currently cover the installation of oil storage tanks.

In the **Republic of Ireland** the requirements of BS 5410 : Parts 1 and 2 are required to be complied with be Building Regulations Part J.

It is recommended that commissioning is carried out by a competent and qualified service engineer.

It should be noted that it is the responsibility of the installer to ensure that the boiler is properly commissioned. Failure to do so may invalidate the boiler guarantee and any extended warranty.

PROCEDURES

1. Oil Tank

The installation of the oil tank and supply line should comply with all the instructions shown earlier in this manual. Consult OFTEC Manual - Book No. 3, Section 2.

If a single supply line is used ensure that the bottom of the tank is above the burner. A suction line system via a de-aerator should be used where the level of the oil in the tank may fall below the level of the oil burner pump.

CHECK AND ENSURE CORRECT GRADE FUEL OIL HAS BEEN SUPPLIED.

2. The Burner

A two single pipe system may also be used in low-level tank installations. See page 21 Section 5. Please flush out oil pipe by drawing off some oil before connecting fuel pipe to burner - otherwise there is a danger of grit and dirt being forced into the burner pump, resulting in pump blockage, damage and 'lock-out'

3. The Boiler

A. Switch off the power supply, ensure that the boiler and system is full of water, all valves are open and that installation conforms with all Standards, Regulations and Instructions.

C. Check that the condensate trap is primed.

C. Check that boiler baffles are correctly positioned.

D. Check the oil supply by disconnecting the oil supply hose at the burner and running off a quantity to ensure it is free from air. then bleed air from burner pump. Refer to section 2, page 7, sketch C, Item-E.

E. If fitted, check that the time switch is 'ON' and that both room and boiler thermostats are calling for heat.

F. Reconnect electrical supply and the boiler should start. If the burner lock-out activates, this suggests air in the pump. Wait a minute or so and try again. If lock-out occurs again, air must be bled from the pump pressure gauge connection point once more.

G. View the burner flame through the sight glass - it should be bright cream/yellow without any sign of smoke. Use a smoke gun to check that the burner is burning clean.

H. Run the boiler for about fifteen minutes then take a CO_2 reading and adjust as necessary.

HANDING OVER

A thorough check of the system should be made, then the householder should receive a clear and concise demonstration of the boiler operation and any system controls.

This manual and burner manufacturers manual plus any other instructions should be handed over to the user, the guarantee card should be completed and posted, and the user advised about the importance of annual servicing.

COMMISSIONING RECORD - PAGE 59
Should be completed and a copy kept in engineers file.

NOTE: IT IS STRONGLY RECOMMENDED THAT SERVICING IS CARRIED OUT BY A COMPETENTLY QUALIFIED ENGINEER.

RECOMMENDED SERVICE INTERVALS

C2 Kerosene Annually

Before carrying out a service it is recommended that the following is checked:

A). Smoke

B). CO2

C). The flue gas temperature

D). Oil pressure

E). Ensure flue is unrestricted & operating properly

At the same time check for oil and combustion leaks. Advance to service **ONLY** after ensuring that both electric and oil supply to boiler is safely isolated

THE OIL TANK

Draw off any accumulated water and sludge from the tank by opening the drain cock. Turn off the oil supply and remove the filter bowl, then wash the element clean with kerosene. Steel Tank Only

THE BOILER

Remove combustion access door for access to baffles and to clean heat exchanger.

Check insulation sealing and its silver foil lining in combustion access door - replacing when necessary. When refitting this door be careful not to damage the foil and insulation by over tightening.

THE BURNER

Check performance of oil-nozzle and replace as necessary.

Ensure correct specification replacement nozzle is used.

Check all oil filters and replace as necessary.

Remove burner and clean blast tube and ensure that airways are clear.

Ensure electrodes are clean, dry, not broken and are set as per burner specifications.

Clean fan and photocell.

Once again check flexible oil lines and connections for damage or leaks, replace as necessary.

Combustion Check

Carry out combustion analysis and ensure that boiler is performing to specification outlined in manual. Flue conditions may cause deviation from these figures.

Always keep careful record of flue gas analysis results including any verbal and written advice to customer (householder). Always check carefully for restricted or blocked flue. If possible record CO levels and advise customer of need to keep boiler room well ventilated.

SERVICING RECORD - PAGE 58

A

FIREBIRD
BOILERS

Formula
For Better Boiler Service

HOUSEHOLDER

Switch on your central heating boiler and check its operation before commencement of heating season.

During the summer season your boiler may be switched off for long periods. In our climate, summer dampness attacks electrical circuits, burner and boiler parts. Deposits on boiler and flue surfaces dampen, and may fall loose resulting in flues and ducts becoming clogged. Deposits also act as an insulator and thus reduce efficiency.

Boilers and burners should be cleaned and serviced before summer switch-off, then switched on and checked again before needed for the winter heating.

This eases seasonal rush on your service engineer and helps him/her give you a better service. Arranging a regular service contract with him/her will help keep your boiler in top condition.

"A stitch in time saves nine" - and disappointment.

Issued by FIREBIRD BOILERS in the interest of our customers and the heating industry.

HEALTH & SAFETY INFORMATION

Under the Consumer Protection Act 1987 and Section 6 of the Health and Safety Act 1974, we are required to provide information on substances hazardous to health.

INSULATION AND SEALS

Ceramic Fibre, Alumino - Silicone Fibre material are used for boards, ropes and gaskets. Known hazards are that people may suffer reddening and itching of the skin. Fibre entering the eye will cause foreign body irritation. It may also cause irritation to the respiratory tract.

Precautions should be taken by people with a history of skin complaints or who may be particularly susceptible to irritation. High dust levels are only likely to arise following harsh abrasion. Suitable personal protective equipment should be worn where appropriate.

Generally, normal handling and use will not give discomfort. Follow good hygiene practices, wash hands before consuming food, drink or using the toilet.

First Aid - Medical attention should be sought following eye contact or prolonged reddening of the skin.

The small quantities of adhesives and sealants used in the product are cured. They present no known hazards when used in the manner for which they are intended.

THIS PRODUCT HAS BEEN DESIGNED TO THE FOLLOWING STANDARDS:

EMC Directive
(Electromagnetic compatibility) 89/336/EC
Standards:
EN 61000-6-1: Electromagnetic Compatibility Generic Standard - Immunity for residential, commercial and light industrial environments. (Feb.2001)

EN 61000-6-3: Electromagnetic Compatibility Generic Standard - Emission standard for residential, commercial and light industrial environments. (Feb.2001)

LV Directive
(Low voltage) 73/23/EEC
Standard:
IEC 60335-1: Household and similar electrical appliances - Safety (May 2001)

Boiler Efficiency Directive 92/42/EEC
Standard:
BSEN 304: Oil boilers with forced draft burners.

FUEL SPILLAGE

1. Switch off all electrical and other ignition sources.
2. Remove all contaminated clothing to safeguard against fire risk and skin damage. Wash affected skin thoroughly with soap and water and remove clothing to a safe well ventilated area and allow to air before cleaning.
3. Contain and smother the spill using sand or other suitable oil absorbent media or non-combustible material.
4. Do not allow fuel to escape into drains or water courses. If this happens, contact the relevant authorities in your area. (Ireland Only)
   Contact The Environment Agency on 0800 807060 (UK Only)
5. Consult local Authority about disposal of contaminated soil.

SAFETY

Safe use of Kerosene and Gas Oil.

These fuels give off a flammable vapour when heated moderately. Vapour ignites easily, burns intensely and may cause explosion. The vapour can follow along at ground level for considerable distances from open containers and spillages collecting as an explosive mixture in drains, cellars, etc.

Fuels remove natural oils and fats from the skin and this may cause irritation and cracking of skin. Barrier cream containing lanolin is highly recommended together with good personal hygiene and where necessary appropriate personal protection equipment. (P.P.E.)

Gas oil may also cause irreversible damage to health on prolonged or repeated skin contact.

Always store fuels in a properly constructed and labelled tank. Always handle fuel in open air or well ventilated space away from sources of ignition and refrain from smoking.

Always drain fuel using a proper fuel retriever, funnel or mechanical siphon. Never apply heat to a fuel tank, container or pipework. Never siphon fuel through tube by mouth. If accidentally swallowed contact doctor immediately and do **NOT** induce vomiting. Avoid inhaling fuel vapour as this can cause light headedness and seriously impair judgement.

FIRST AID

If fuel is accidentally swallowed:-

* Seek medical attention immediately. Do NOT induce vomiting.

If fuel is splashed into eyes:-

* Wash out with running water for at least ten minutes and seek medical attention.

SEALED HEATING CIRCUIT

The system must comply with BS 7074 Part 1 and BS 5449 Part 1 with a maximum water temperature of 80˚C.

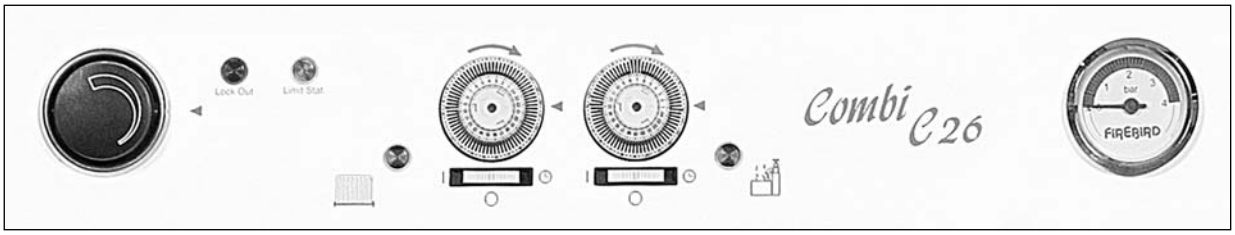

* A manual reset overheat limit thermostat is located at the rear of the electrical control panel (**see page 13**). If a boiler overheat condition arises the burner will stop and remain inoperative until this thermostat reset button is depressed.

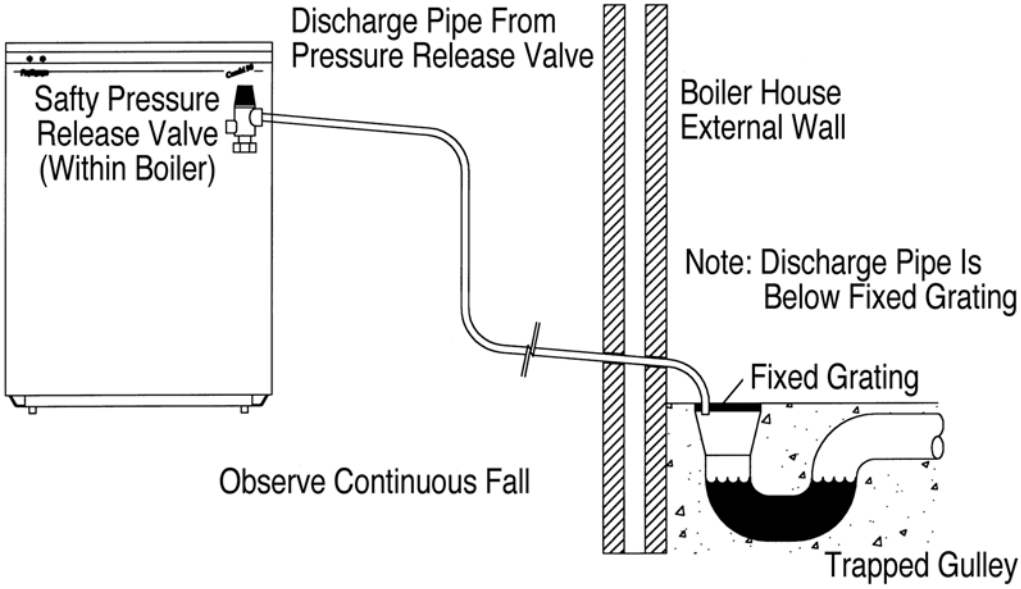

* A pressure relief valve to BS 6759 operating at 3 bar (45 lb/in^2) is fitted. A discharge pipe of 15 mm diameter is also fitted to the discharge connection on the pressure relief valve. During installation an extension pipe should be fitted to this, leading, to outside the building. The pipe should be as short as possible and may need a tundish fitted in a protected position within the building.
  Alternatively, if acceptable, it may discharge within building. In this case the discharge pipe **outlet end**, should terminate within 100 mm above inside floor level, and be in a visible and accessible position. No tundish is necessary in this position and householder should be advised that this discharge end should always remain open. In every case it should be directed downwards away from any electrical components or where it could cause a hazard to the user/occupier. See diagram above.

  Note:- Water must not discharge above an entrance, window or where public have access. The installer must be aware that the discharge may be boiling water.

* A drain cock must be fitted at the lowest points in the system to enable draining as necessary. A drain cock is already fitted at the bottom of the boiler heat store to enable draining of boiler and tank unit only. All pipes connected to boiler should have shut off valves fitted to facilitate this.

* A Pressure gauge, having range 0 to 4 bar is fitted to boiler control panel. This indicates water pressure in boiler and system at time of reading. **Pressure when cold should** be $^1/_2$ bar minimum to 1.5 bar maximum. This is known as Initial System Design Pressure (P_i).

When the system is cold and filled to initial fill pressure P_i the pointer on the pressure gauge should point at **1 bar.**
The pressure gauge shown has **two red zones** marked on it. The first is between 0 and 1/2 a Bar. If the pointer falls into this zone when system and boiler are cold this is indicating that initial System Fill Pressure has dropped and this will activate the pressure switch cutting off power supply to the Combi C. Refill system manually until indicated pressure rises to 1 bar.

N.B.	**Initial System Design Pressure (measured in bar) equals static head of system (measured in bar) plus 0.3.**
N.B.	**Insufficient pressure in the boiler will cause power supply to switch off.**

* A 12 litre expansion vessel is fitted to boiler, precharged with air or nitrogen to **1 bar** which allows a system static head of 5 metres. If the static head is greater than this then the air charge in the vessel must be increased to balance the higher static head. **The air charge should not exceed a pressure of 1.5 bar.**

The Firebird Combi c Boiler's with built in Expansion Vessels having an initial air charge pressure of 1 bar. If total water content of system is greater than the capabilities of the vessel supplied then an additional vessel will be required to be fitted to the return pipe as close as is practicable to the boiler. There should be no valves or restrictions between vessel and boiler. See page 39 for vessel sizes.

If static head is altered then it is also necessary to alter air charge pressure to equal static head (+ 0.3 Bar). This is necessary in order to keep system water from entering expansion vessel until system is being heated and thus allow its maximum acceptance volume (V) to be used **only to accommodate the expansion of system water during boiler operation.**

Remember that air charge pressure **must** be **equal** in both vessels (attached to the same system). In the above example this is 1 bar. **Air charge pressure** is the air pressure in expansion vessel **before** system is filled. It is measured with a tyre gauge attached to Schrader valve on the vessel.

N.B. N.B. The second **red zone** is between 2 1/2 and 4 bar pressure. When the heating system is up to full working temperature, if the pointer on the pressure gauge should enter this **red zone** showing a final system design pressure of more than **2 1/2 bar**, it is likely that:

(a) **Total** system water content is greater than that calculated and if additional expansion vessel has been fitted it should be replaced with a larger unit
OR if integral boiler expansion vessel only is used then an additional expansion vessel is required.

(b) Static head may be higher than calculated. In this case it is necessary to re-measure static head and revise expansion vessel air charge pressure.

(C) Expansion vessel incorrect size or air charge pressure incorrect.

Refer to BS 7074 Part 1 and BS 5449 for further information.

EXPANSION VESSEL AND SYSTEM REQUIREMENTS

Safety Valve Setting	3 bar		
Initial System Pressure	0.5 bar	1.0 bar	1.5 bar
Total Water Content of System	TOTAL VESSEL VOLUME **		
Litres	Litres	Litres	Litres
25	2.1	2.7	3.9
50	4.2	5.4	7.8
75	6.3	8.2	11.7
100	8.3	10.9	15.6
125	10.4	13.6	19.5
150	12.5	**->[16.3]<-**	23.4
175	14.7	19.1	27.2
200	16.7	21.8	31.2
225	18.7	24.5	35.1
250	20.8	27.2	39.0

FOR FURTHER INFORMATION CONSULT APPROPRIATE TRAINING MANUALS AND BS 7074 PART 1, BS 5449, ETC

*** * When calculating size of any additional expansion vessel required, remember to deduct the boiler expansion vessel volume of 10 litres from the calculated total system vessel volume required, as given in above table.**

EXAMPLE: using above table

If Total water content of system	**-**	**150 litres**
And Initial system pressure required is	**-**	**1.0 bar**
Then Vessel volume required [from above table]	**-**	**16.3 litres**
But Vessel supplied with boiler	**-**	**10.0 litres**
Therefore Additional vessel required	**-**	**6.3 litres (minimum)**
(For this system of 150 litres - total water volume)		

..Nearest available stock size for additional vessel required, at 1 bar initial system pressure (taken from above table) is 8 Litres.

It is emphasised that the installer should be fully acquainted with sealed system installation and operation, calculation of total system water volume, determining of initial system pressure required and calculation of any additional expansion vessel volume required.

NB .. Ensue that all expansion vessels in the same system are set at EQUAL air charge pressures.

DOMESTIC HOT WATER CIRCUITS

The final 600 mm mains water supply should be of copper tube to BS 2871 Part 1. Ensure that any capillary fittings used are of lead free solder variety.

For user comfort the mains pressure at taps should be between I and 5 bar. If it exceeds this it is advisable to fit a pressure reducing valve adjusted to reduce pressure to an acceptable level within above range.

To ensure user comfort and satisfaction it may be advisable to discuss foregoing with householder. Where long hot water supply-pipe runs are used these should be insulated to prevent rapid cooling of residual hot water after draw off is completed.

If the boiler is fitted in a hard water area check that hardness does not exceed 150 p.p.m. by testing with a standard test strip. Immerse test strip in flowing tap water for one second. Shake off excess water. Check strip after approximately fifteen seconds. If three or more zones have changed colour the water hardness is over 150 p.p.m. **(Read instructions on test strip package)**. Fitting of an in line scale inhibitor is then necessary.

Failure to check water hardness and fit appropriate water softening equipment will result in scale build up and consequent reduction in water heating performance. Check with local Water Authority if in doubt.

Hot and Cold taps, mixing valves and fittings must be suitable for operating at mains pressure up to 10 bar Bidets with the supply of hot and cold mains water are permitted if they are of the over-rim flushing type and have shrouded outlets which enable them to have temporary hand held spray attached. Showers of loose headed or flexible type must be fixed so that the head cannot fall closer than 25mm above the top edge of the bath to prevent it immersing into the bath water. Alternatively the shower should have an anti-syphoning device incorporated at the point of the flexible connections.

WATER FLOW REGULATION

The flow rate of water from individual taps may be affected by any of the following:-

1. **Number of taps in use at one time**
2. **Cold mains pressure**
3. **Diameter and length of pipework in the domestic water circuits within the dwelling.**
4. **Excessive flow from 3/4" bath taps in a house system converted to mains water supply.**

It is recommended:-

A. To ensure that the mains water connection to the appliance is the first connection from the mains on entering the dwelling.

B. Where flow starvation is encountered that flow restrictors or balancing valves are fitted at supply outlets.

* The boiler has circulating pumps fitted therefore no other is normally required. They are factory set at maximum output. This setting should not be altered on the domestic hot water pump as production of domestic hot water may be adversely affected.

SYSTEM FILLING, TESTING AND MAKE-UP

Introduction
Mains cold water is supplied through the boiler pipework to two separate circuits operating at different pressures.

Circuit One
This is the Radiator Heating System including boiler and primary tank which is filled from mains supply via flex filling loop (Page 45) within boiler to a pressure determined from system static head, expansion vessel size and system water volume.This flexible filling loop should be disconnected when boiler and system are filled and checked, See diagrams below.

Circuit Two
This is the domestic **cold** water supply through the boiler plate heat exchanger via domestic hot water pipework direct to hot taps. This works at full mains pressure or if this is excessive at a reduced pressure controlled by a mains pressure reducing valve to a pressure acceptable to householder and satisfactory for the correct operation of Combi C Boiler System.This mains pressure reducing valve is **not supplied with boiler**, but will be available from a local supply merchant.

System filling should take place slowly and can be done by either of the following methods:-

Manual Filling
The Firebird Combi C comes with this system built into the appliance. It consists of a flexible hose connection with a butterfly shut off valve at each end and a double check valve assembly at boiler end. To conform to requirements of BS 7074 Part I and local water Authority Bye Laws, the flexible hose should be disconnected at one end when filling has been completed and checked. Two end caps are supplied and should be fitted to disconnected ends as a safety precaution against inadvertent opening of ball valves.

Pressure gauge on Control Panel should be checked occasionally when system is cold. Refill to initial fill pressure if necessary. Should this be a frequent occurrence, complete system should be checked for leaks.

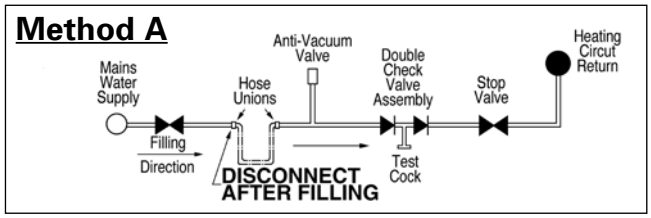

Automatic Filling
Automatic System filling may be made with a feed and make-up cistern connected through a double check valve and stop valve assembly to the return side of the heating system as close to the boiler as is practicable. This cistern should be located above the heating systems highest point to give a minimum static head of 300 mm between it (highest point) and cistern. The manual filling system fitted to boiler should then be disconnected and connection points blanked off.

This system has the advantage of automatic water make-up in the event of system pressure loss due to air elimination and minor leaks. In any case control panel pressure gauge should be occasionally checked.

N.B. Remember also to check air fill pressure of Expansion Vessel when system is cold using standard tyre gauge connected to Schrader air valve on vessel.

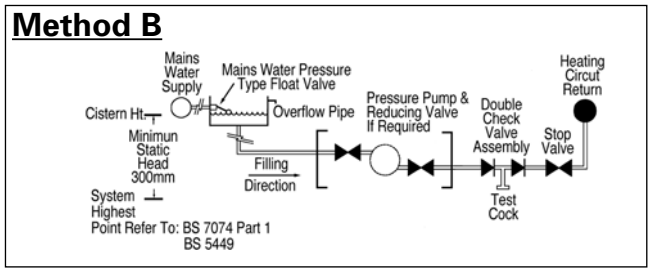

NOTE: **There shall be no direct connection to the mains, even with the use of a non-return valve without the permission of Local Water Authority.**

* It is recommended that an inhibitor be added at the time of final fill to protect the System from corrosion. Ensure that this is carried out in accordance with inhibitor manufacturers instructions. Installer should ensure that inhibitor used is suitable and that it will have no adverse effect on Expansion Vessels diaphragms or any other part or component of the system.

SYSTEM FILLING, TESTING AND COMMISSIONING

* **Before proceeding to filling, ensure that electricity supply is switched off at mains to avoid any possibility of time switch operating and passing power to appliance prior to filling.**

Filling and Testing

Check that all connections, especially compression joints, are fully tightened. Re-check and ensure that pressure vessel air charge is correct, then fill system with water via filling system used. **Turn off water supply before system pressure reaches safety valve operation point of 3 bar.** (Say 2 to 2.5 bar). Vent system via all manual air vents **including circulating pumps,** boiler, radiators, system high points. etc. Check that dust caps are loosened on auto air vents, keep constant check on system pressure gauge (fitted to control panel). If pressure has dropped readmit water to above pressure. Ensure all appropriate boiler and system valves are open.

With water supply turned off, **thoroughly** flush out boiler and system to remove **all** foreign matter before allowing boiler and pumps to operate. If in doubt drain system and repeat above procedure. At this stage flushing-out water should be clean and clear of all foreign matter.

Refill the system and again vent at all points as described above. Examine the complete system for water leaks having pressurised it to 1 - 2.5 bar. Correct any leaks, then check operation of safety valve by admitting further water until this valve operates. This should occur when system pressure rises to between 2.7 and 3.3 bar. When satisfied with valve operation, and with mains water still turned off, draw off sufficient water until initial system design fill pressure (P_i). (cold fill) is established (0.5 - 1 bar - as calculated for system).

Remember that initial cold fill pressure can only be checked when system water has properly cooled down. Check that **final operating pressure** (P_f) is under 2.5 bar with all radiators turned on and up to highest working temperature. Should system operating pressure exceed this, check:

1. That initial cold fill pressure is correct and , if additional expansion vessel is fitted, that pressure is equal in each vessel.

2. That expansion vessels are sized correctly.

Special attention should be given to existing heating systems where Firebird Combi C boiler has replaced an existing unit. Extra effort should be made to ensure that all original pipe work and radiators are repeatedly flushed. If possible use a proprietary cleansing agent suitable for system as loosened scale and foreign matter can seriously reduce domestic hot water performance and pump efficiency.

Use corrosion inhibitor of suitable type.

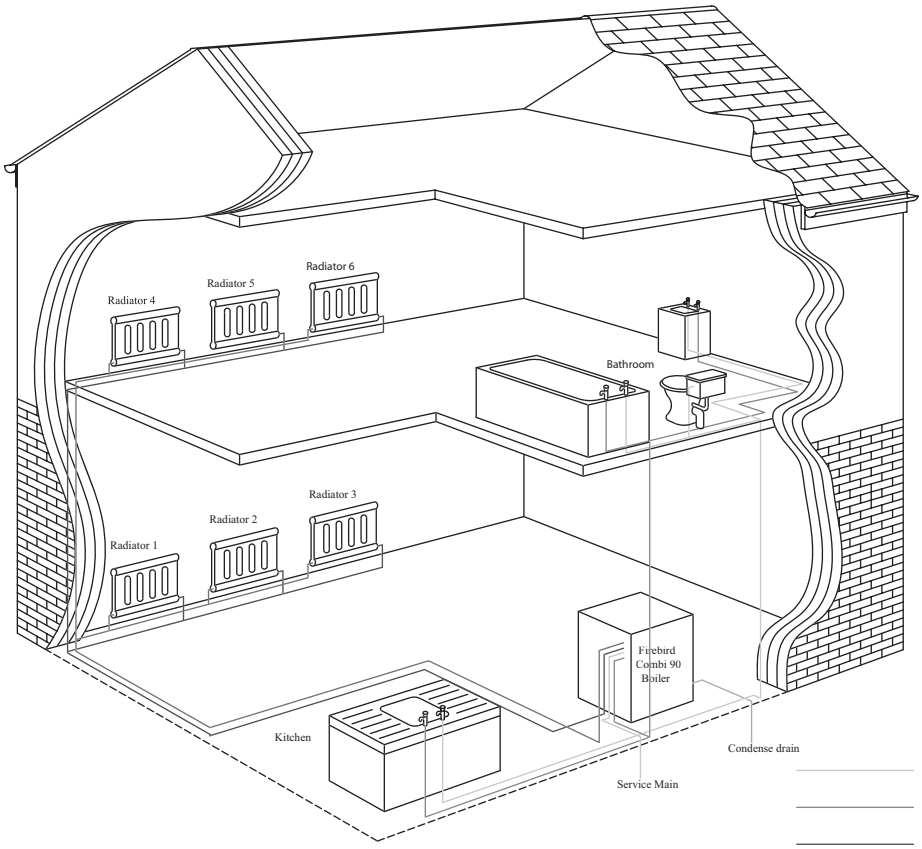

Domestic Cold Feed
Domestic Hot
Central Heating Cold
Central Heating Hot

Firebird Combi C System

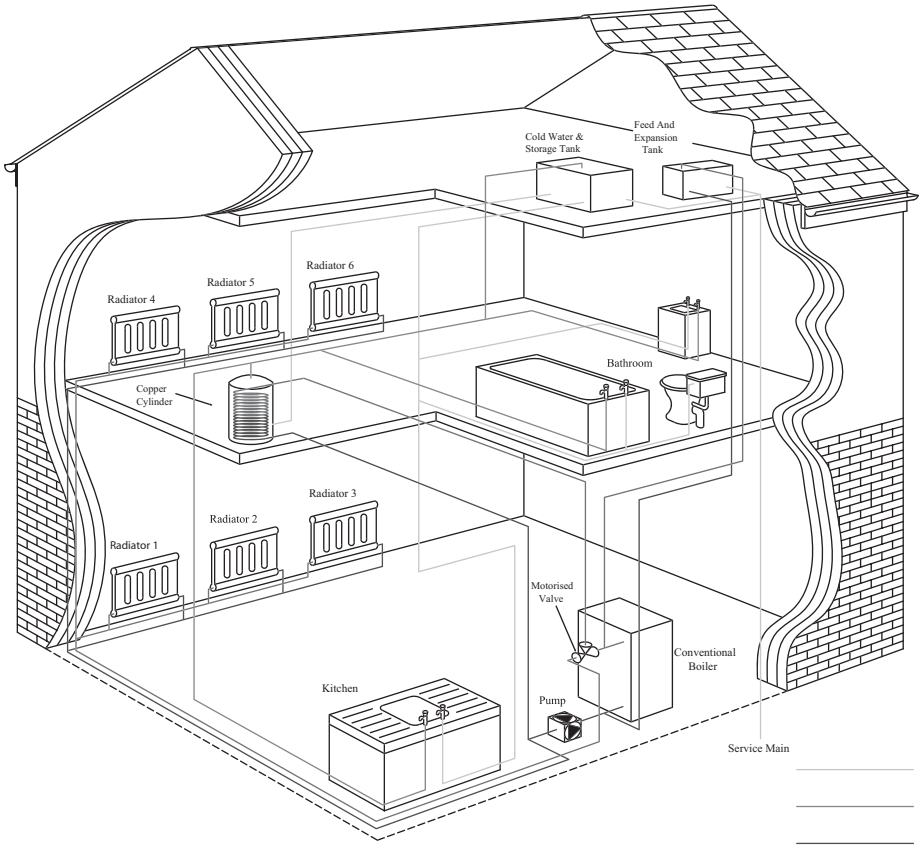

Domestic Cold Feed
Domestic Hot
Central Heating Cold
Central Heating Hot

Typical Conventional Boiler System

Fault Finding Logic For Control Box Type 5352 SE/LD RDB Series Oil Burners

RIELLO BURNERS

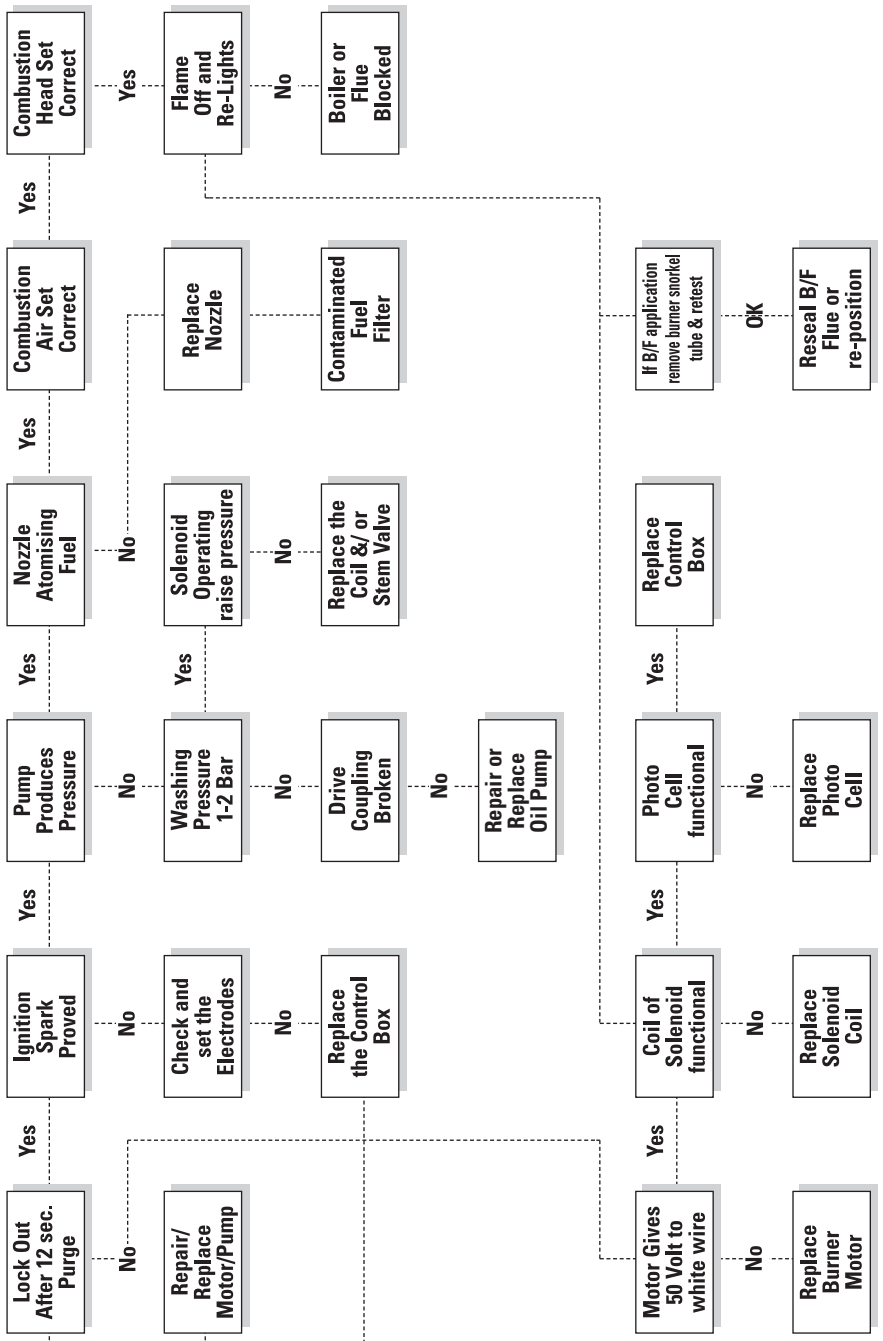

NOTES:

Solenoid coil test for resistance of 100 Ohms (+-5) or continuity

Accurate Photocell testing is very difficult without a lux meter so it is best to replace the photocell if suspect.

Motor white wire returns 50-53 Volt AC to control box.

Burners on Balanced flue systems Can recirculate flue products resulting in burner recycling if this happens check flue position & sealing.

RIELLO RDB BURNER

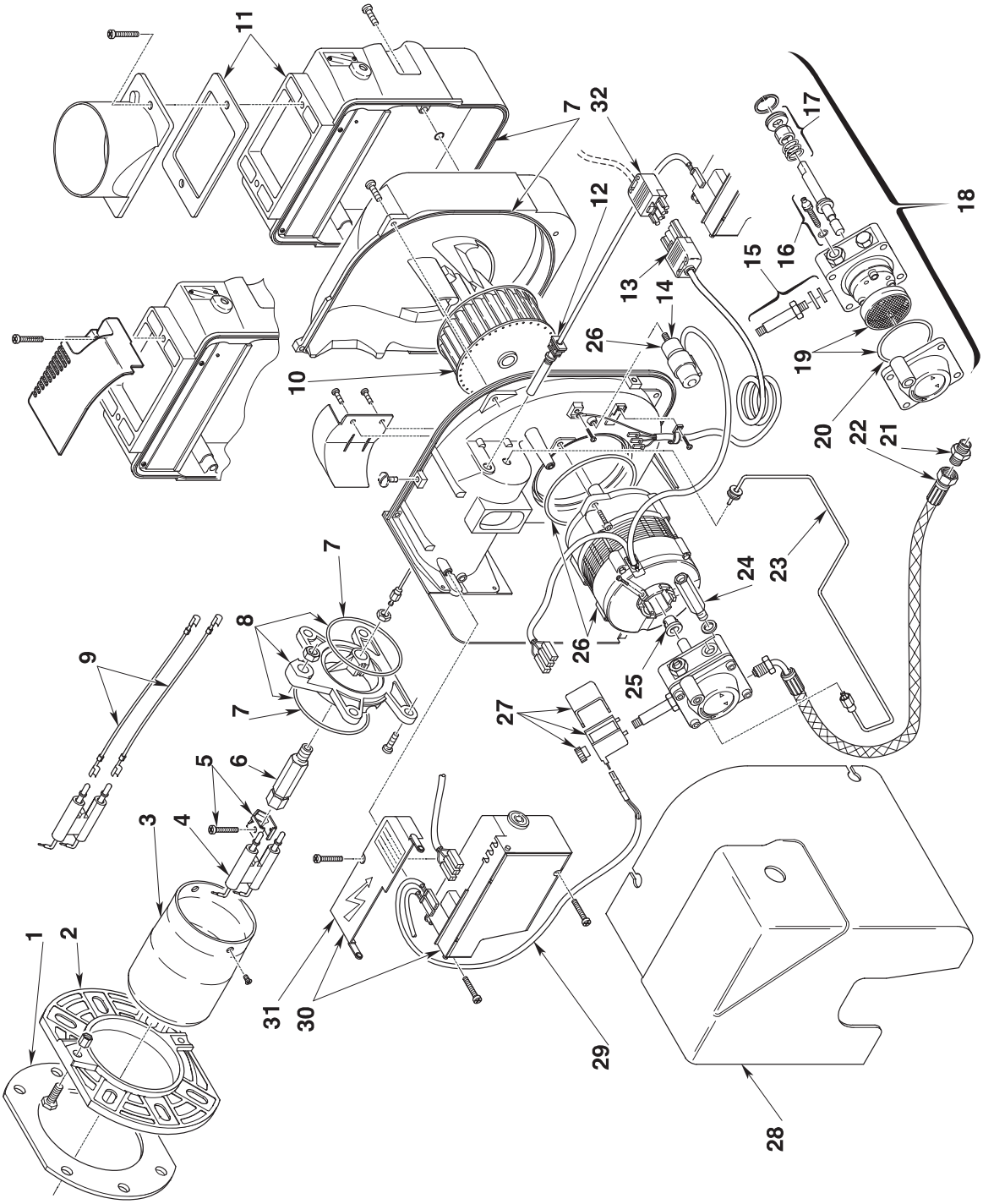

RDB2.2 Firebird C20 C.O.D. 3514105 RDB2.2 Firebird C26 C.O.D. 3514105 RDB2.2 Firebird C35 C.O.D. 3514105

RIELLO RDB BURNER PARTS

Item No	3514105	3514305	3514306	Code Spare Parts	Description
1	•	•	•	3005787	Gasket
2	•	•	•	3006384	Flange
3		•	•	3002447	Cup-Shaped Head
3				3002533	Cup-Shaped Head
3	•			3002507	Cup-Shaped Head
3				3008768	Cup-Shaped Head
4	•	•	•	3007513	Electrode Assembly
5	•	•	•	3006552	Electrode Bracket
6	•	•	•	3008642	Nozzle Holder
7	•	•	•	3008878	Kit Seals
8	•	•	•	3008643	Collar
9	•	•	•	3008794	High Voltage Lead
10	•	•	•	3005788	Fan
11	•	•	•	3008647	Air Damper Assembly
11				3008839	Air Damper Assembly
12	•	•	•	3008646	P.E. Cell
13	•	•	•	3002657	4 Pole Socket
14	•	•	•	3002837	Capacitor 4,5uf
15	•	•	•	3007582	Needle Valve
16	•	•	•	3008651	Regulator
17	•	•	•	3000439	Pump Seal
18	•	•	•	3008654	Pump
19	•	•	•	3008653	Filter - O - Ring
20	•	•	•	3007162	O - Ring
21	•	•	•	3003602	Connector
22				3007621	Flexible Oil Line
22	•	•	•	3005720	Flexible Oil Line
23	•	•	•	3008644	Tube
24	•	•	•	3008876	Pressure Gauge
25	•	•	•	3000443	Joint
26	•	•	•	3002836	Motor + Capacitor
27	•	•	•	3008648	Coil
28	•	•	•	3008879	Cover
29	•	•	•	3008851	Lead Coil
30	•	•	•	3008652	Control Box 535RSE/LD
31	•	•	•	3008649	Protection
32	•	•	•	3007418	4 Pin Plug

FIREBIRD KITCHEN C MODEL ASSEMBLY

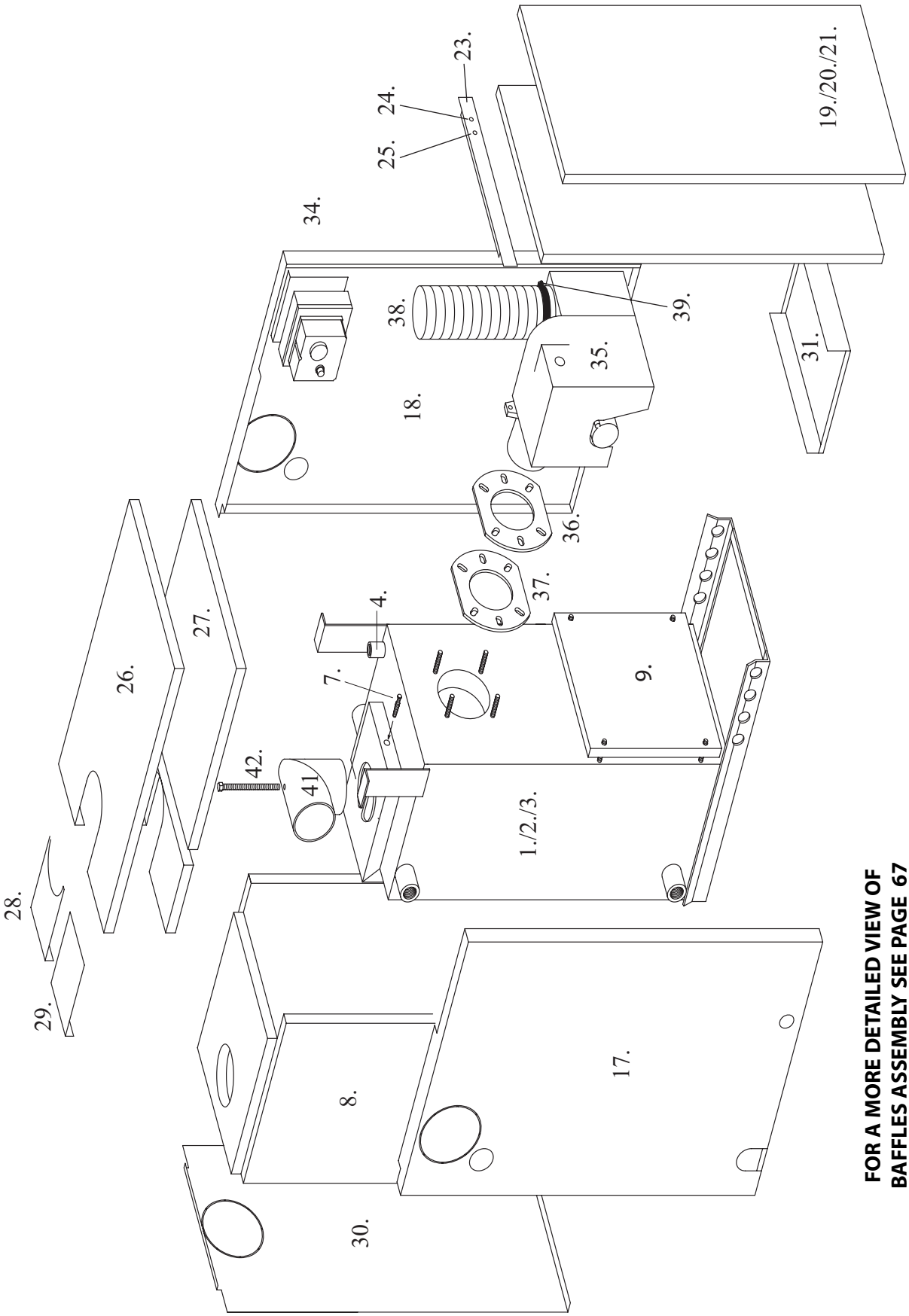

FOR A MORE DETAILED VIEW OF BAFFLES ASSEMBLY SEE PAGE 67

PARTS DESCRIPTION

Item No	Component	Part No.	Qty Per Boiler
1	C20 Boiler	3203001	1
2	C26 Boiler	3213002	1
3	C35 Boiler	3223003	1
4	Stat Pocket	FC 03020	1
5	Stat Pocket Retaining Spring	FC 03020a	1
6	Stat Pocket Locking Spring	FC 03020b	1
7	Flue Gas Analysis Blank	9982814	1
8	Boiler Insulation Jacket	83282836	1
9	Door	9981106	1
10	Door Gasket.	9982807	1
11	Dog Tooth Baffles	9981208	2
12	Baffles A1-A2 (C20-C26)	9971209	4
13	Baffles A1-A2 (C35)	9921210	4
14	Baffles (Platipus)	9981211	2
15	Tube 1 Baffles	9981212	4
16	Tube 2 Baffles	9981213	5
17	Side Panel L H Side	3282337	1
18	Side Panel R H Side	3282338	1
19	Front Panel C20	3202339	1
20	Front Panel C26	3212339	1
21	Front Panel C35	3222339	1
22	Front Panel Insulation	3282840	1
23	Light Strip	3282341	1
24	Orange Neon Light Indicator	FC 03139	1
25	Red Neon Light Indicator	FC 03140	1
26	Top Panel	3282342	1
27	Top Panel Insulation	3282843	1
28	Flue Trim Plate	3082323	1
29	Flue Blank Trim Plate	3082324	1
30	Back Panel	3282344	1
31	Drip Tray	3282345	1
32	Ball Stud	9992819	8
33	Spring Latches	9992820	8
34	Control Box	3293446	1
35	RDB2.2 Burner	See page 45	1
36	Burner Mounting Plate	See page 45	1
37	Burner Mounting Gasket	See page 45	1
38	Snorkel Hose	9982830	.5m
39	Snorkel Hose Jublee Clip	9982231	2
40	Condense Trap	9982232	1
41	BF Flue Elbow	3282234	1
42	BF Flue Elbow Bolt	3282235	1

FIREBIRD SYSTEM C MODEL ASSEMBLY

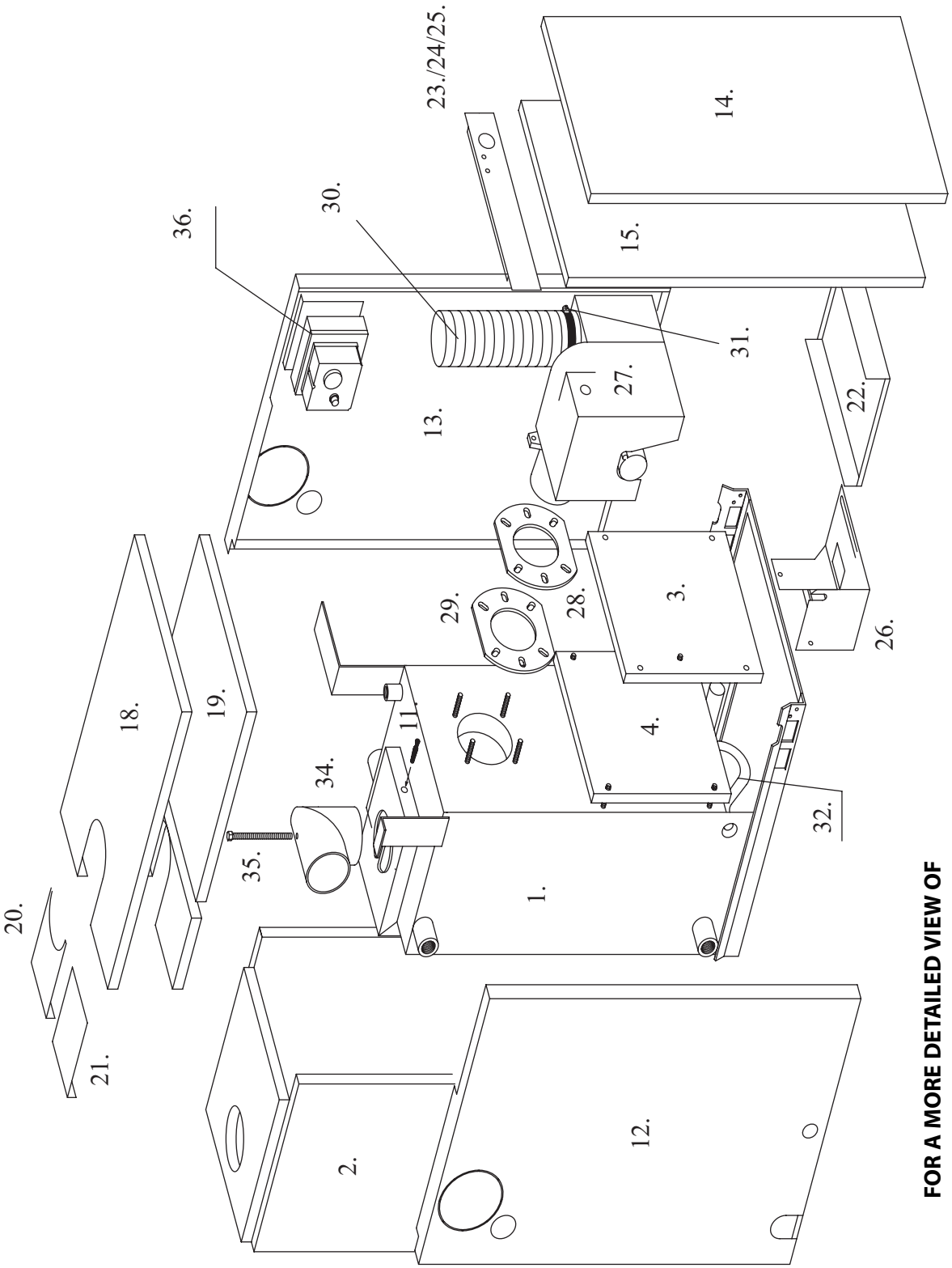

FOR A MORE DETAILED VIEW OF BAFFLES ASSEMBLY SEE PAGE 67

PARTS DESCRIPTION

Item No	Component	Part No.	Qty Per Boiler
1a	Combi Boiler C20	3003001	1
1b	Combi Boiler C26	3013001	1
1c	Combi Boiler C35	3023001	1
2	Insulation Jacket	3282856	1
3	Door	9981107	1
4	Door Gasket.	9982808	1
5	Dog Tooth Baffles	9981209	2
6	Baffles A1-A2 (C20-C26)	9971210	4
7	Baffles A1-A2 (C35)	9921210	4
8	Baffles (Platipus)	9981211	2
9	Tube 1 Baffles	9981212	4
10	Tube 2 Baffles	9981213	5
11	Flue Gas Analysis Blank	9982814	1
12	Side Panel L H Side	3082315	1
13	Side Panel R H Side	3082316	1
14	Front Panel	3182317	1
15	Front Panel Insulation	3182818	1
16	Ball Stud	9992819	8
17	Spring Latches	9992820	8
18	Top Panel	3182321	1
19	Top Panel Insulation	3182822	1
20	Flue Trim Plate	3082323	1
21	Flue Blank Plate	3082324	1
22	Drip Tray	3182328	1
23	C20 Front Panel Strip	3102825	1
24	C26 Front Panel Strip	3112825	1
25	C35 Front Panel Strip	3122825	1
26	Pressure Vessel Bracket	9981429	1
27	RDB2.2 Burner	See page 45	1
28	Burner Mounting Plate	See page 45	1
29	Burner Mounting Gasket	See page 45	1
30	Snorkle Hose	9982830	.5m
31	Snorkle Hose Jublee Clip	9982231	2
32	Condence Trap	9982232	1
33	Condense Hose	9982833	1m
34	BF Flue Elbow	3282234	1
35	BF Flue Elbow Bolt	3282235	1
36	Control Box	3333459	1

SYSTEM C PLUMBING PARTS

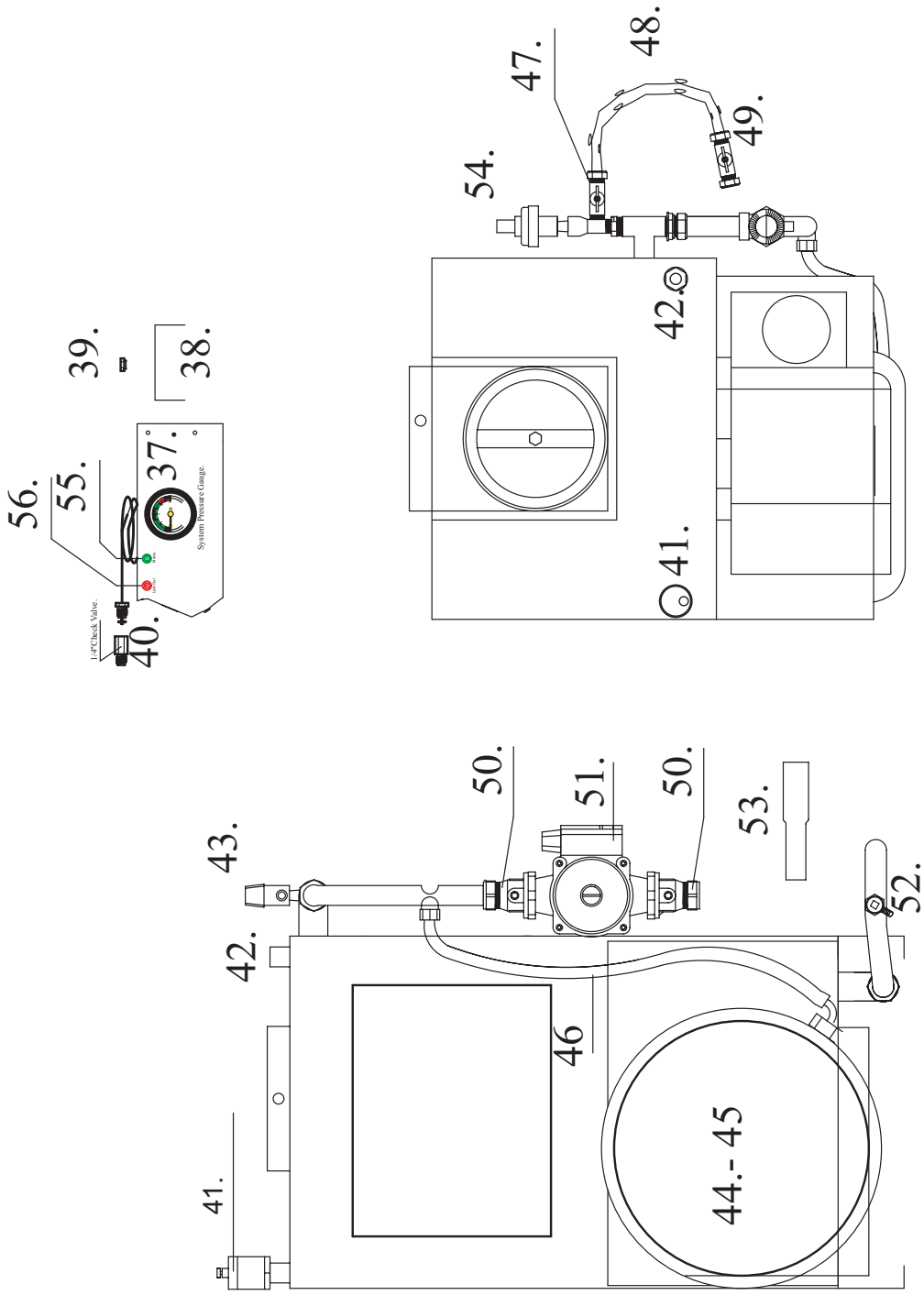

PARTS DESCRIPTION

Item No	Component	Part No.	Qty Per Boiler
37	Pressure Gauge	3082802	1
38	Pressure Gauge Bracket	3082803	1
39	Pressure Gauge Nut	3082804	1
40	1/4 Bsp M/FM Check Valve.	FC 03040CV	1
41	Auto Air Vent	FC 03010	1
42	Stat Pocket (3 stat)	FC03020	1
43	Safety Valve	FC 03040	1
44	10 Ltr Pressure Vessel	FC 0306070	1
45	12 Ltr Pressure Vessel	FC 0306090	1
46	f 3/4" X cf 1/2" Hose	3082849	1
47	Filling Loop - 15mmDoubleCheck Valve	FC 031000	1
48	Filling Loop Hose	FC 031000	1
49	Filling Loop 15mm Check Valve	FC 031000	1
50	Pump Valve	FC 03101	4
51	Circulating Pump	FC 03102	2
52	1/2" Drain Cock	FC 03103	2
53	22mm to 28mm Copper Pipe	3122864	1
54	Pressure Switch	3082852	1
55	Green Neon Light Indicator	FC 03138	1
56	Red Neon Light Indicator	FC 03140	1

FIREBIRD COMBI C MODEL ASSEMBLY

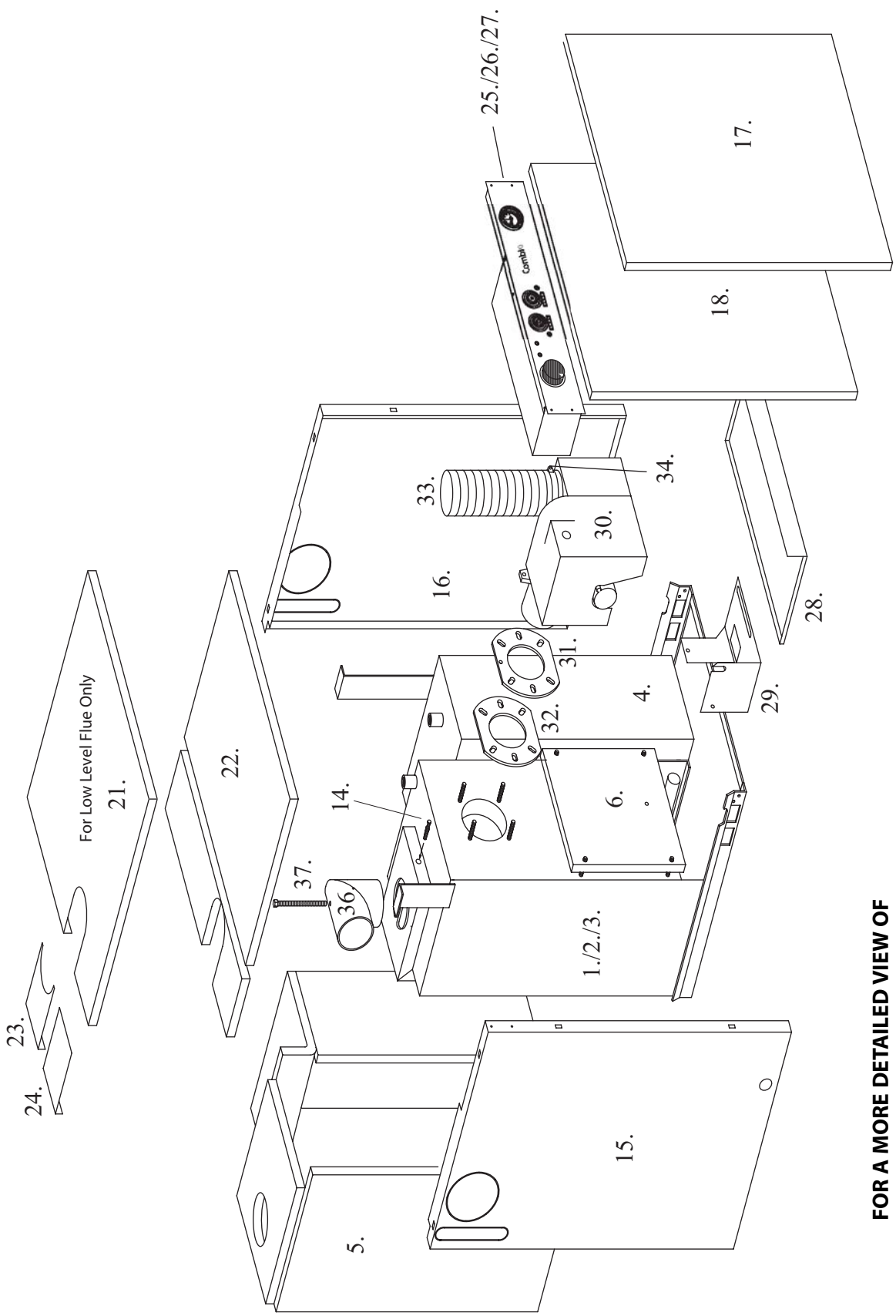

FOR A MORE DETAILED VIEW OF BAFFLES ASSEMBLY SEE PAGE 67

PARTS DESCRIPTION

Item No	Component	Part No.	Qty Per Boiler
1	Combi Boiler C20	3003001	1
2	Combi Boiler C26	3013001	1
3	Combi Boiler C35	3023001	1
4	Tank	3083105	1
5	Insulation Jacket	3082806	1
6	Door	9981107	1
7	Door Gasket.	9982808	1
8	Dog Tooth Baffles	9981209	2
9	Baffles A1-A2 (C20-C26)	9971210	4
10	Baffles A1-A2 (C35)	9921210	4
11	Baffles (Platipus)	9981211	2
12	Tube 1 Baffles	9981212	4
13	Tube 2 Baffles	9981213	5
14	Flue Gas Analysis Blank	9982814	1
15	Side Panel L H Side	3082315	1
16	Side Panel R H Side	3082316	1
17	Front Panel	3082317	1
18	Front Panel Insulation	3082818	1
19	Ball Stud	9992819	8
20	Spring Latches	9992820	8
21	Top Panel	3082321	1
22	Top Panel Insulation	3082822	1
23	Flue Trim Plate	3082323	1
24	Flue Blank Plate	3082324	1
25	C20 Control Panel	3003825	1
26	C26 Control Panel	3013825	1
27	C35 Control Panel	3023825	1
28	Drip Tray	3082328	1
29	Pressure Vessel Bracket	9981429	1
30	RDB2.2 Burner	See page 45	1
31	Burner Mounting Plate	See page 45	1
32	Burner Mounting Gasket	See page 45	1
33	Snorkel Hose	9982830	.5m
34	Snorkel Hose Jublee Clip	9982231	2
35	Condense Trap	9982232	1
36	BF Flue Elbow	3282234	1
37	BF Flue Elbow Bolt	3282235	1

COMBI C CONTROL PANEL

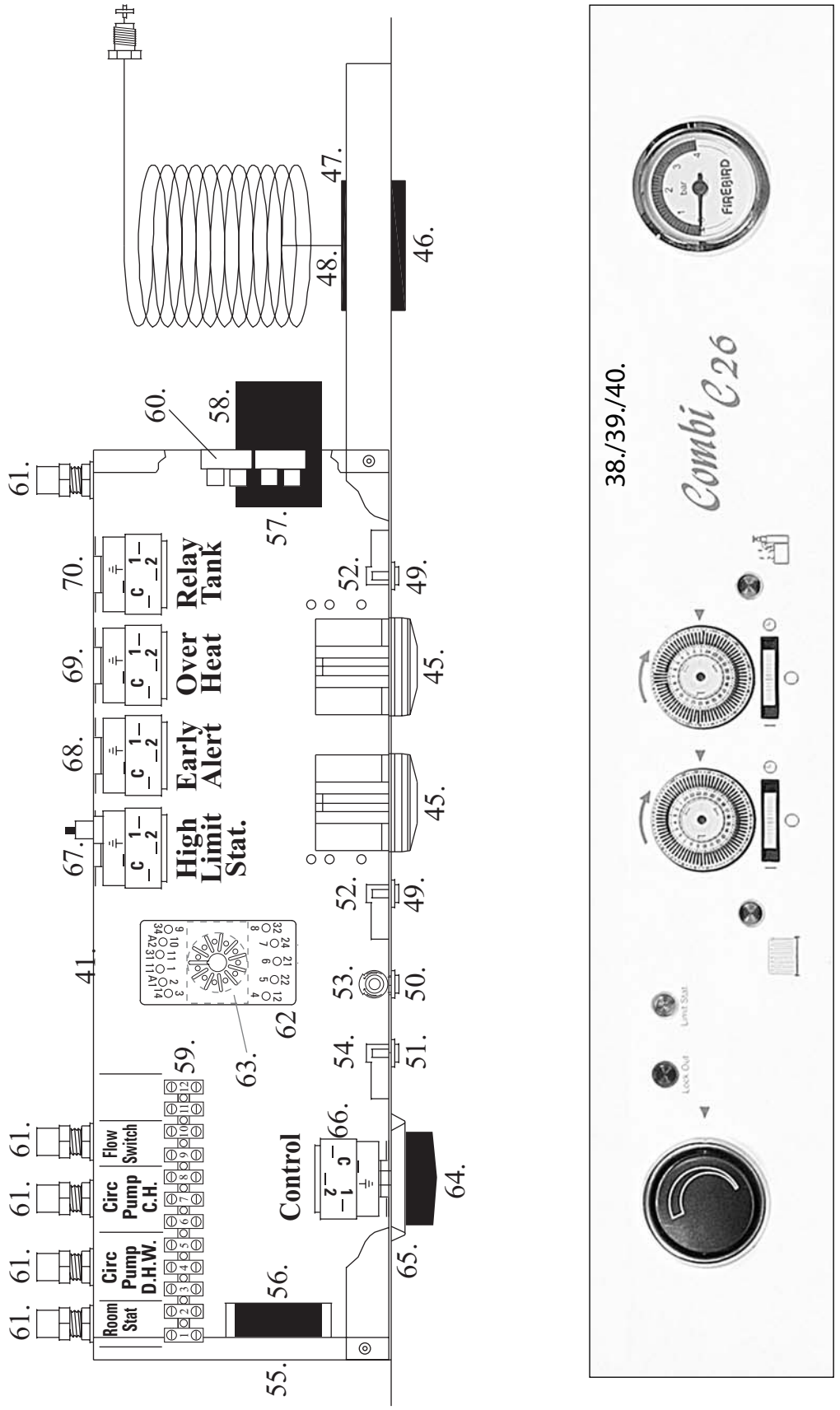

NO. 45 - TWIN TIMER KIT SOLD SEPARATELY

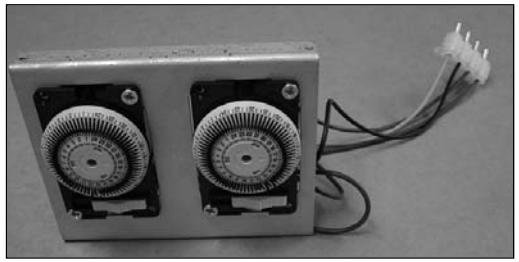

CONTROL PANEL DESCRIPTION

Item No	Component	Part No.	Qty Per Boiler
38	C20 Control Panel Front	30028	1
39	C26 Control Panel Front	30128	1
40	C35 Control Panel Front	30228	1
41	Control Panel Back	30023	1
42	Control Panel Top	FC 03131	1
43	Timer Bracket	FC 03132	1
44	Timer Blank	FC 03133	1
45	Timer x 2 Twin Timer Kit	FC 03137	2
46	Pressure Gauge	3082802	1
47	Pressure Gauge Bracket	3082803	1
48	Pressure Gauge Nut	3082804	1
49	Green Neon Light Indicator	FC 03138	2
50	Orange Neon Light Indicator	FC 03139	2
51	Red Neon Light Indicator	FC 03140	1
52	Green Light Bulb	FC 03141 G	2
53	Orange Light Bulb	FC 03141 O	1
54	Red Light Bulb	FC 03141 R	1
55	4 Pin Burner Socket	FC 03142	1
56	4 Pin Burner Plug.	FC 03143	1
57	3 Pin Mains Plug	3082826	1
58	3 Pin Mains Socket	3082827	1
59	Wiring Strip Connector	FC 03144	1
60	Two Piece Timer Strip Connector	FC 03145	1
61	Cable Gland	FC 03156	6
62	Relay Base	FC 03147	1
63	Relay	FC 03148	1
64	Control Stat Eyebrow Knob	FC 03149	1
65	Control Stat Chrome Bezel.	FC 03150	1
66	Control Stat.	FC 03151	1
67	Limit Stat.	FC 03152	1
68	Early Alert Stat.	FC 03153	
69	Over Run Stat.	FC 03154	1
70	Relay Tank Stat.	FC 03155	1

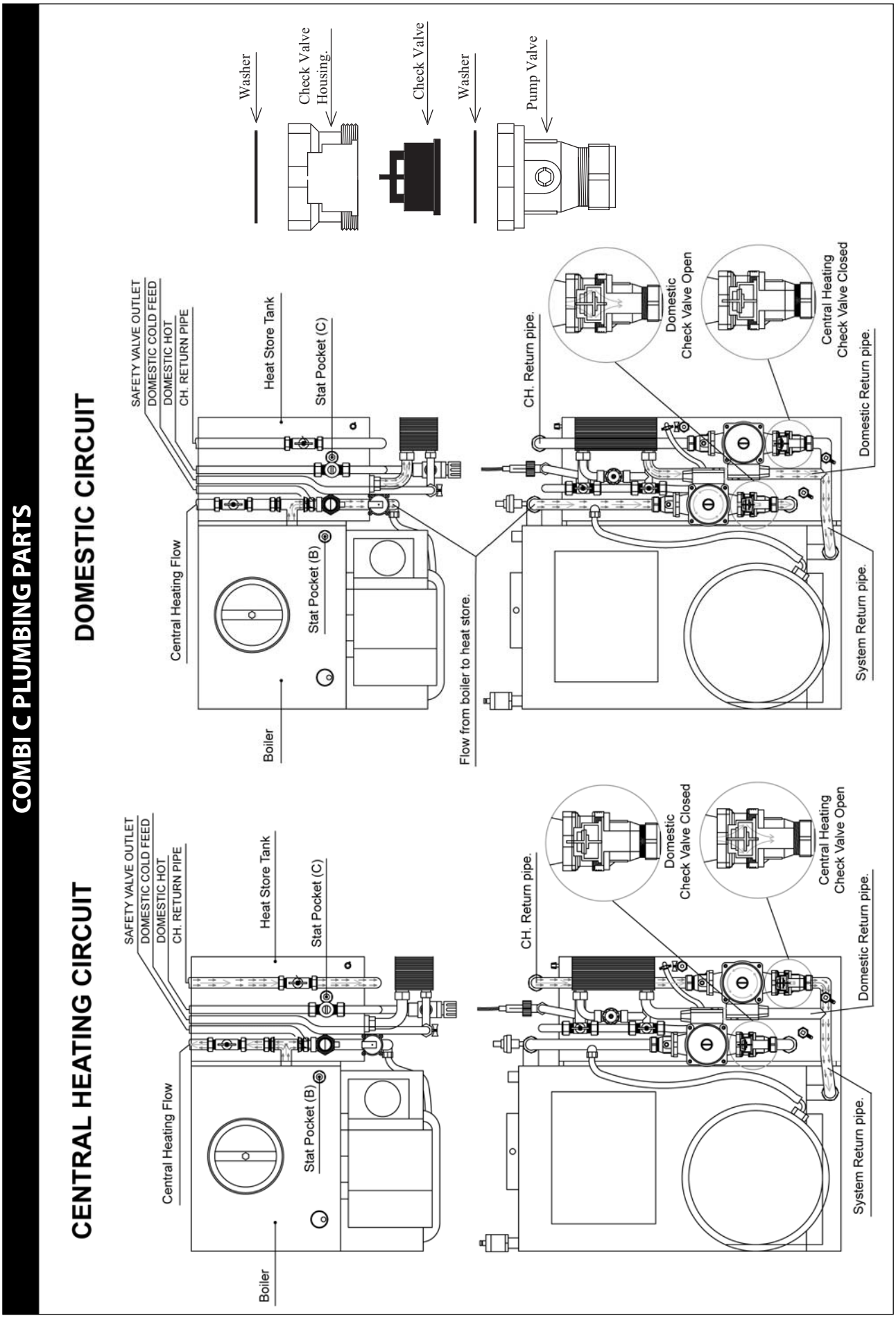
COMBI C PLUMBING PARTS
CENTRAL HEATING CIRCUIT
DOMESTIC CIRCUIT
Washer
Check Valve Housing.
Check Valve
Washer
Pump Valve
SAFETY VALVE OUTLET
DOMESTIC COLD FEED
DOMESTIC HOT
CH. RETURN PIPE
Heat Store Tank
Stat Pocket (C)
Stat Pocket (B)
Central Heating Flow
Boiler
Flow from boiler to heat store.
CH. Return pipe.
Domestic Check Valve Open
Central Heating Check Valve Closed
Domestic Return pipe.
System Return pipe.
Domestic Check Valve Closed
Central Heating Check Valve Open

CHECK VALVE ASSEMBLY

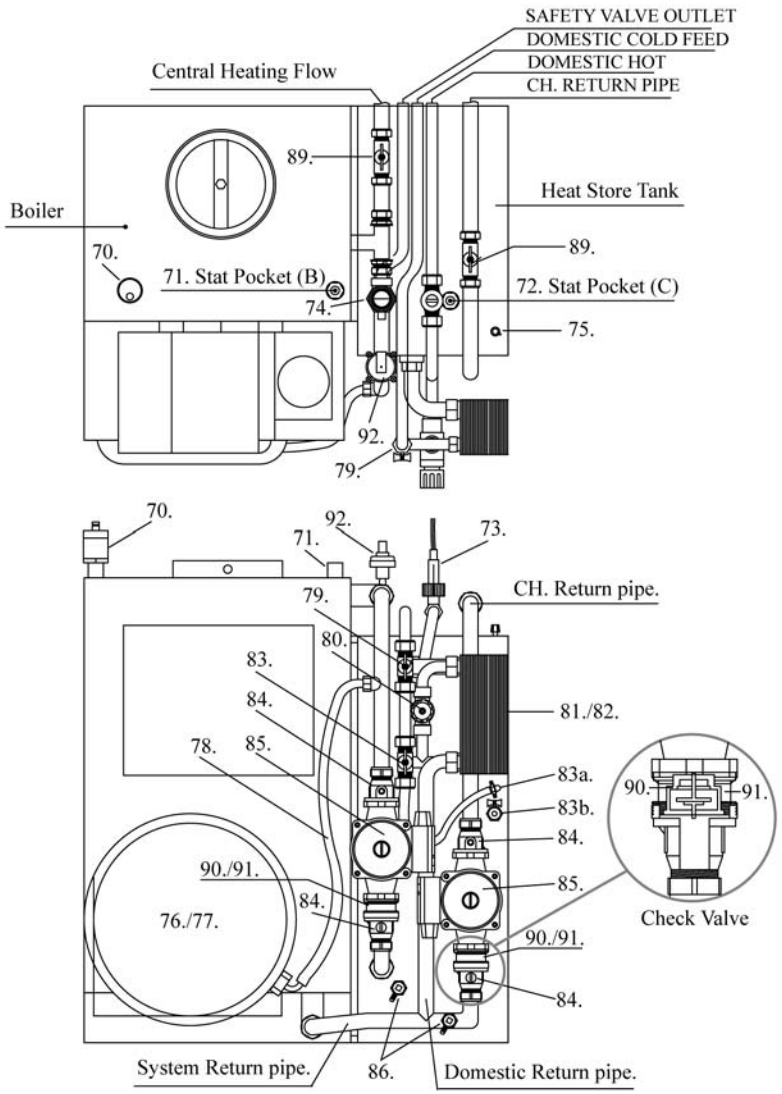

PLUMBING PARTS DESCRIPTION

Item No	Component	Part No.	Qty Per Boiler
70	Auto Air Vent	FC 03010	1
71	Stat Pocket (4 stat)	3082847	1
72	Stat Pocket (Single stat)	3082848	1
73	Sika Flow Switch	FC 03030	1
74	Safety Valve	FC 03040	1
75	Manual Air Vent	FC 03050	1
76	10 Ltr Pressure Vessel	FC 0306070	1
77	12 Ltr Pressure Vessel	FC 0306090	1
78	f 3/4" X cf 1/2" Hose	3082849	1
79	15mm Double Check Valve	FC 03070	1
80	Thermostatic Mixing Valve	FC 03080	1
81	25 Plate Heat Exchanger	FC 0309090	1
82	31 Plate Heat Exchanger	FC 03090120	1
83	Filling Loop - 15mm Check Valve	FC 031000	1
83a	Filling Loop Hose	FC 031000	1
83b	Filling Loop 15mm Check Valve	FC 031000	1
84	Pump Valve	FC 03101	4
85	Circulating Pump	FC 03102	2
86	1/2" Drain Cock	FC 03103	2
89	22mm Ball Valves	FC 03104	2
90	Check Valve	3082850	2
91	Check Valve Housing	3082851	2
92	Pressure Switch	3082852	1

FIREBIRD HEAT PAC C, SYSTEM PAC C & COMBI PAC C

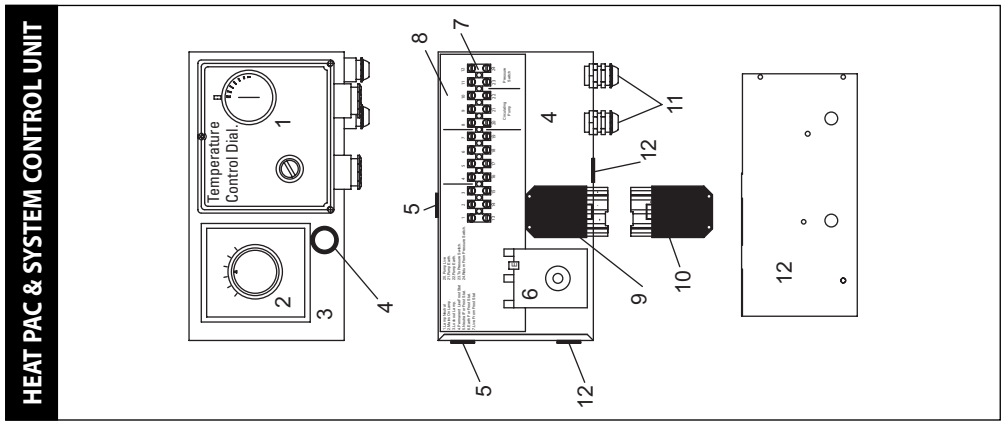

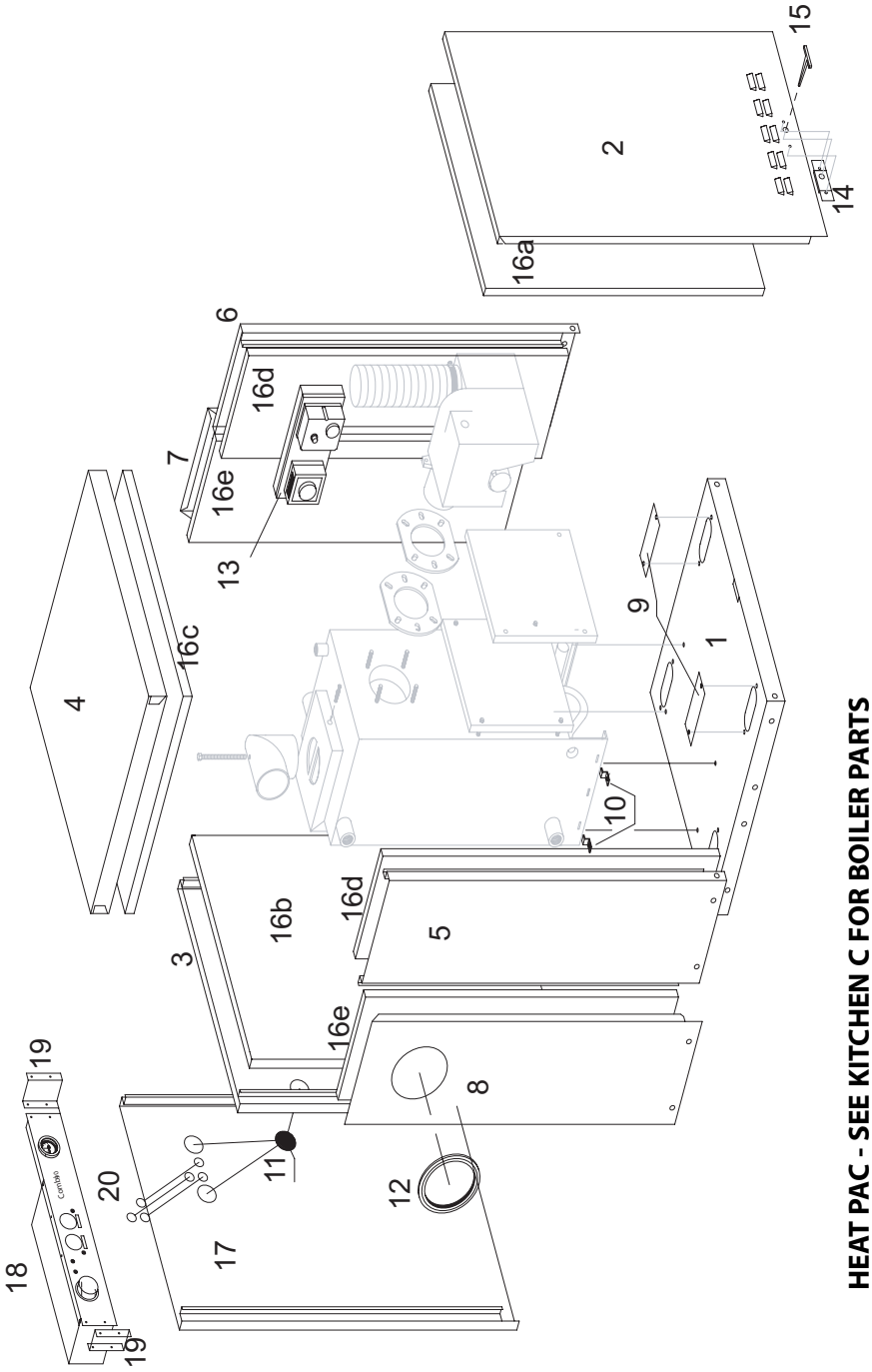

HEAT PAC - SEE KITCHEN C FOR BOILER PARTS
COMBI PAC - SEE COMBI C FOR BOILER PARTS
SYSTEM PAC - SEE SYSTEM C FOR BOILER PARTS

PARTS DESCRIPTION

COMBI PAC 'C', HEAT PAC 'C' AND SYSTEM 'C' HOUSING PARTS

Item No	Component	Qty Per Boiler	Part No.
1	Base.	1	3381465
2	Front.	1	3381061
3	Back. [Heat Pac C & System Pac C]	1	3381067
4	Top.	1	3381068
5	Fixed Side Left.	1	3381069
6	Fixed Side Right	1	3381070
7	Removable Side [Blank]	1	3381071
8	Removable Side [Flue Side]	1	3381072
9	Base Blanks.	4	3381473
10	Boiler Fixing Clip	2	3381474
11	45mm Body Plug.	6	3382875
12	Flue Panel Flange Seal.	1	3382876
13	Control Box. See Page ?]	1	3383877
14	Lock.	1	3382878
15	Key.	1	3382879
16	Panel Insulation Kit.	1	3382980
	16a Front insulation	1	3382980-2
	16b Back Insulation	1	3382980-3
	16c Top Insulation	1	3382980-4
	16d Fixed Side Insulation.	2	3382980-5
	16e Removable Side Insulation	2	3382980-7
	COMBI PAC C		
17	Back Combi Pac C	1	3081067
18	Combi Pac Base	1	3081465
19	Control Panel Combi Pac C [See Page 61]	1	3083425
20	Control Panel Bracket	2	3081481
21	25mm body Plug	3	3382882
		3	3382882
	HEAT PAC & SYSTEM CONTROL UNIT		
1	Dual Stat	1	TLSC542788
2	Frost Stat [Sunvic]	1	TLM2257
3	Control Box Cover	1	119183
4	Control Box	1	119184
5	Control Box Mounting Bracket	1	119185
6	Over Heat Thermostat	1	FC03154
7	Strip Connector	1	FC03144
8	Label	1	W-1001
9	Socket [Wieland]	1	FC031542
10	Plug [Wieland]	2	FC03143
11	Open Grommet	3	M010281
12	Blank Grommet	2	M011321

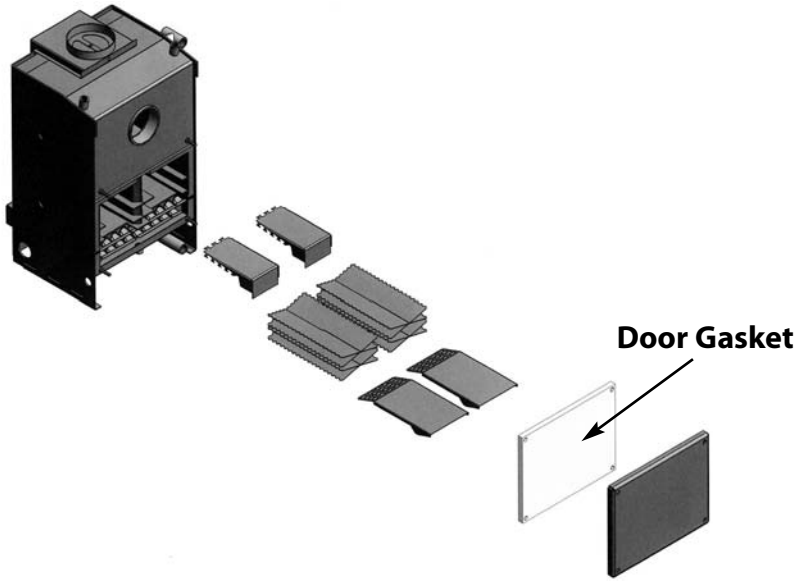

A1. A2. Baffle.

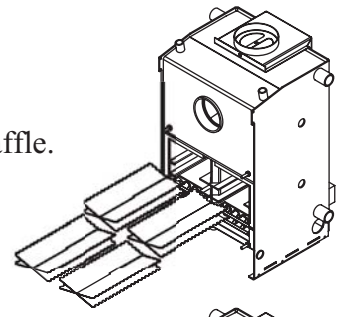

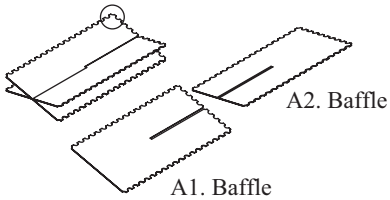

ITEM NO.
Combi C: 9 & 10 (A1. A2. Baffle)
Kitchen C: 12 &13 (A1. A2. Baffle)
System C: 12 &13 (A1. A2. Baffle)

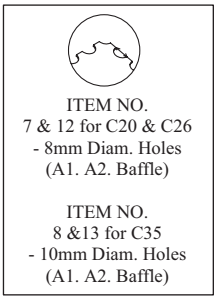

ITEM NO.
7 & 12 for C20 & C26
- 8mm Diam. Holes
(A1. A2. Baffle)

ITEM NO.
8 &13 for C35
- 10mm Diam. Holes
(A1. A2. Baffle)

Dog Tooth Baffle.

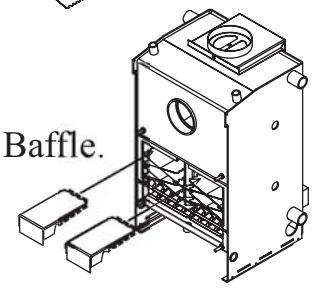

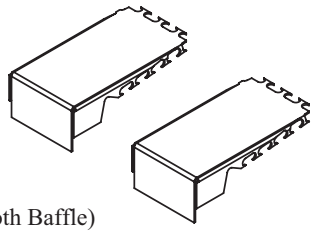

ITEM NO.
Combi C: 8 (Dog Tooth Baffle)
Kitchen C: 11 (Dog Tooth Baffle)
System C: 11 (Dog Tooth Baffle)

Platypus Baffle.

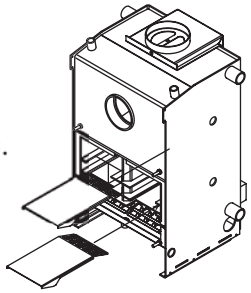

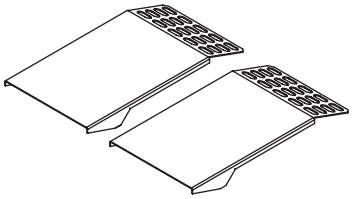

ITEM NO.
Combi C: 11 (Platypus Baffle)
Kitchen C: 14 (Platypus Baffle)
System C: 14 (Platypus Baffle)

Tube Baffle.

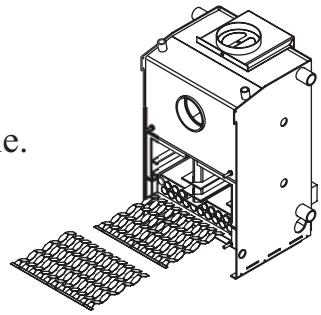

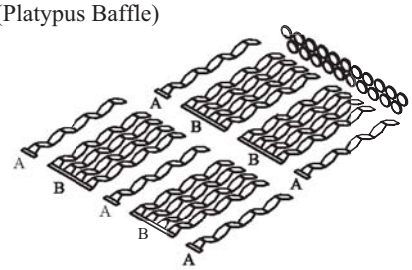

ITEM NO.
Combi C: A= 13 (Tube 2 Baffle), B= 12 (Tube 1 Baffle)
Kitchen C: A= 16 (Tube 2 Baffle), B= 15 (Tube 1 Baffle)
System C: A= 16 (Tube 2 Baffle), B= 15 (Tube 1 Baffle)

• • • • PATENTED BAFFLE DESIGN • • • •

ALL OIL FIRED BOILERS INSTALLERS

It is the responsibility of INSTALLER / HOUSEHOLDER to ensure that the boiler is PROPERLY COMMISSIONED by a competent or OFTEC registered engineer.

Failure to have the appliance commissioned and warranty card completed and returned may invalidate the warranty.

It is not the responsibility of the Manufacture or the Supplier if a boiler will not operate properly due to non commissioning of the appliance.

Please Note: **Should a site inspection be required from the manufacturers engineer, a call-out fee will be charged if the fault is a result of non commissioning.**

Service Report

NB All Information recorded hereunder should also be included in Engineers own filed service reports. It is recommended that the boiler be serviced, ***at least once a year***, and the details recorded below. Combi Boilers may need more frequent service. Engineer should advise householder.

	1ST SERVICE	2ND SERVICE	3RD SERVICE	4TH SERVICE
Burner Model	❒	❒	❒	❒ .....
Oil Type	❒	❒	❒	❒ .....
Nozzle Type	❒	❒	❒	❒ .....
Nozzle Size	❒	❒	❒	❒ .....
Nozzle Angle	❒	❒	❒	❒ .....
Pump Pressure	❒	❒	❒	❒ .....
Air	❒	❒	❒	❒ .....
Smoke Reading	❒	❒	❒	❒ .....
Flue Draft "W.g.	❒	❒	❒	❒ .....
CO_2%	❒	❒	❒	❒ .....
Condensed Trap Primed	❒	❒	❒	❒ .....
F.G.T. °C	❒	❒	❒	❒ .....
Flue Seal	❒	❒	❒	❒ .....
Gaskets	❒	❒	❒	❒ .....
Fire Valve Location	❒	❒	❒	❒ .....
CHECK				
Water	❒	❒	❒	❒ .....
All Connections	❒	❒	❒	❒ .....
Baffles	❒	❒	❒	❒ .....
Baffles in position and correct	❒	❒	❒	❒ .....
CHECK				
D.M. Hot Water	❒	❒	❒	❒ .....
Central Heating	❒	❒	❒	❒ .....
Flow Switch	❒	❒	❒	❒ .....
Power Supply	❒	❒	❒	❒ .....
Date:	.....	.....	.....	.....
Service Engineer:	.....	.....	.....	.....
Tel. No:	.....	.....	.....	.....
Signature:	.....	.....	.....	.....
Comments:	.....	.....	.....	.....
	.....	.....	.....	.....
	.....	.....	.....	.....
	.....	.....	.....	.....

COMMISSIONING RECORD

This record should be carefully completed, remain in this manual and be left with householder. A copy should be kept on file by engineer

INSTALLER/COMMISSIONING ENGINEER (In block capitals)

NAME .....

ADDRESS .....

.....

POSTCODE ..... TEL .....

COMMISSIONING CHECK DETAILS

BOILER MODEL ..... OUTPUT ..... SERIAL NUMBER .....

Burner Model	❒	.....	Gaskets	❒	.....
Oil Type	❒	.....	Fire Valve Location	❒	.....
Nozzle Type	❒	.....			
Nozzle Size	❒	.....	**CHECK**		
Nozzle Angle	❒	.....	Water	❒	.....
Pump Pressure	❒	.....	All Connections	❒	.....
Air	❒	.....	Baffles	❒	.....
Smoke Reading	❒	.....	Baffles in position and correct	❒	.....
Flue Draft "W.g.	❒	.....	**CHECK**		
CO_2%	❒	.....	D.M. Hot Water	❒	.....
Condensed Trap Primed	❒	.....	Central Heating	❒	.....
F.G.T. °C	❒	.....	Flow Switch	❒	.....
Flue Seal	❒	.....	Power Supply	❒	.....

Notes: .....

.....

.....

.....

.....

DATE ..... NAME ..... ADDRESS .....

COMMISSIONING COMPANY .....

.....

.....

SIGNATURE ..... POSTCODE ..... TEL .....

FIREBIRD BOILERS Guarantee

1. Firebird hereby guarantees the following (The Guarantees)

a. The Boiler Shell will be free from defective parts or workmanship for a period of 5 years from the date of installation.

b. Burner, controls and flue kits (supplied by Firebird) will be free from defective parts or workmanship for a period of 2 years from the date of installation. (With the exception of burner nozzles, which should be replaced at the recommended service intervals.)

2. Guarantees are subject to the following conditions:

a. All claims under the guarantees must be within the above stated time limits.

b. The boiler must be commissioned by qualified persons and as set out in the Installation Manual, using correct test equipment.

c. Maintenance should be carried out at the intervals stated in the Installation Manual.

d. Installation of the boiler must be in accordance with (a) Installation Manual, (b) all relevant standards and codes of practice.

e. Firebird can accept no liability in respect of any defect arising from incorrect installation, negligence, fair wear and tear, misuse, alteration or repair by unqualified persons.

f. Firebird will not accept any liability in respect of any defect occurring in the heat exchanger due to limescale build-up and or low return water temperature.

g. The guarantees extend to reasonable labour costs EXCEPT under clause 1a where any valid claim made after 3 years will not include labour costs.

h. Firebird's prior authorisation must be obtained before examination or repair of the boiler takes place.

i. Firebird will examine all claims made under the guarantees and for any claims that are deemed invalid, the costs incurred will be borne by the owner.

j. That the appliance was used only for normal domestic central heating purposes.

3. Any defective part removed under any or all of the guarantees **MUST** be returned to Firebird.

STATUTORY RIGHTS OF THE OWNER ARE NOT AFFECTED BY THIS GUARANTEE

Firebird Boilers Guarantee Registration

IMPORTANT

Please ensure that the appliance is commissioned and the installer or commissioning engineer fills in the commissioning check details below, which should then be promptly returned to nearest Firebird address.

FIREBIRD UK
UNIT 6, WESTOVER INDUSTRIAL ESTATE,
IVYBRIDGE, DEVON, ENGLAND. PL21 9ES
TEL: 01 752 691177
FAX: 01 752 691131

FIREBIRD BOILERS
BALLYMAKEERA,
CO. CORK, IRELAND.
TEL: 026 45253
FAX: 026 45309

FIREBIRD PRODUCTS
SHEAN, FORKHILL,
NEWRY, N. IRELAND. BT35 9SY
TEL: 028 30888330
FAX: 028 30889096

TEAR OFF HERE & RETURN TO THE APPROPRIATE ADDRESS

HOUSEHOLDER (In block capitals)

NAME .....

ADDRESS .....

.....

POSTCODE ..... TEL .....

INSTALLER (In block capitals)

NAME .....

ADDRESS .....

.....

POSTCODE ..... TEL .....

COMMISSIONING CHECK DETAILS

BOILER MODEL			OUTPUT			SERIAL NUMBER		
Burner Model	❒	.....	CO_2%	❒	.....	Baffles	❒	.....
Oil Type	❒	.....	Condensed Trap Primed	❒	.....	Baffles in position and correct	❒	.....
Nozzle Type	❒	.....	F.G.T. °C	❒	.....			
Nozzle Size	❒	.....	Flue Seal	❒	.....			
Nozzle Angle	❒	.....	Gaskets	❒	.....	**CHECK**		
Pump Pressure	❒	.....	Fire Valve Location	❒	.....	D.M. Hot Water	❒	.....
Air	❒	.....	**CHECK**			Central Heating	❒	.....
Smoke Reading	❒	.....	Water	❒	.....	Flow Switch	❒	.....
Flue Draft in W.C.	❒	.....	All Connections	❒	.....	Power Supply	❒	.....

DATE ..... NAME ..... ADDRESS .....

.....

COMMISSIONING COMPANY .....

SIGNATURE ..... POSTCODE ..... TEL .....

For further information on Firebird Products please contact

FIREBIRD UK
Unit 6, Westover Industrial Estate, Ivybridge, Devon PL 21 9 ES.
Tel: [+44] 01 752 691177 Fax: [+44] 01 752 691131

FIREBIRD BOILERS
Baile Mhic íre, Co. Chorcaí.
Tel: [+353] 026 45253 Fax: [+353] 026 45309

FIREBIRD PRODUCTS
Shean, Forkhill, Newry. BT35 9SY.
Tel: [+44] 028 30888330 Fax: [+44] 028 30889096

Int. Access Codes: Eg. N.I. +44 28 30888330

Revision 2. © 22 2 2006

Affix
Stamp
Here

.....

.....

.....

.....

.....