HOSPITA

Sink pillar tap, 1/2", cold

MODEL # 30978000

Pure Freude an Wasser

GROHE

Product Description:
Sink pillar tap, 1/2", cold

Standard Specification:
GROHE StarLight chrome finish
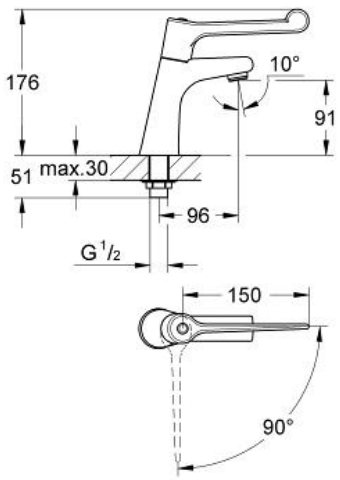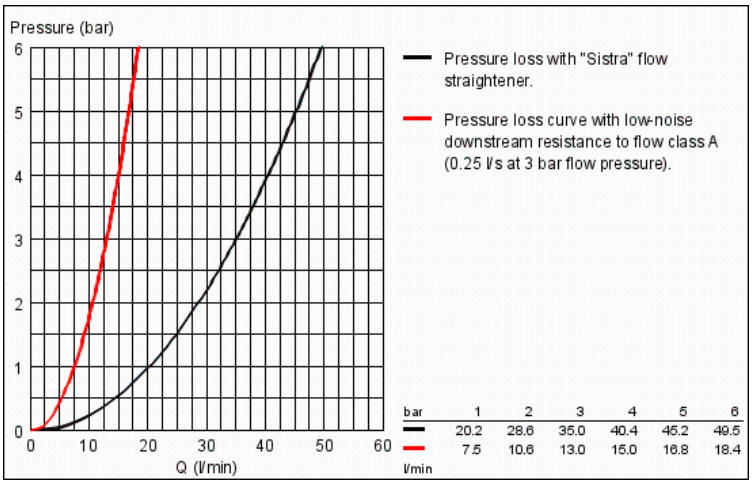
Color:
❑ 30978000 chrome