TECHNICAL DATA SHEET

ROXOR

BRASSWARE

Sales Code: WIL303

Description: Willow Deck Mounted Bath Filler

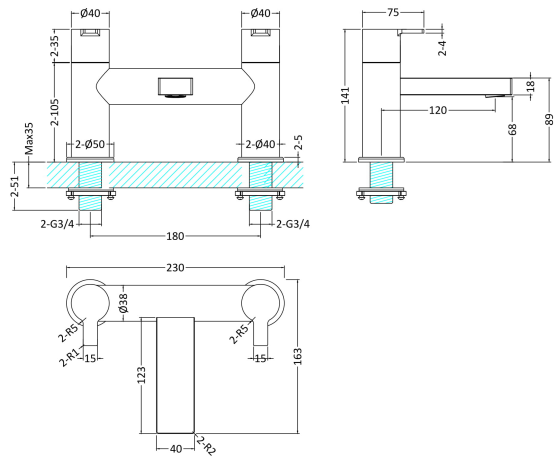

Product Dimensions	
Height (mm):	141
Width (mm):	230
Depth (mm):	163
Length (mm):	
Nett Weight (kg):	2.9
Packaging Dimensions	
Height (mm):	175
Width (mm):	250
Depth (mm):	245
Gross Weight (kg):	2.9
Packaging Data	
Box Colour:	White Cardboard Box
Box Qty:	1
Label Size:	100 x 50
Label Colour:	White Label
Label Qty:	1
Outer Box Dimensions (If Applicable)	
Height (mm):	
Width (mm):	
Depth (mm):	
Length (mm):	
Gross Weight (kg):	
Barcode:	5056211853558
Product Details	
Country of Origin:	China
Fitting Instruction:	No
Product Material:	Brass
Control Type:	Manual
Waste Included:	Waste Not Included
Waste Type:	Not Applicable
WRAS Approval: No	Approval No: N/A
Valve/Cartridge Type:	1/4 Turn Ceramic Disc
Colour/Finish:	Chrome
Mount Type:	Deck
Operating Pressure (bar):	0.5
Flow Rates: (Litres Per Min) 0.1 bar: 5.4	0.5 bar: 16.5 1 bar: 23.9 2 bar: 34.4 3 bar: 42
Pipe Size:	3/4"
Pipe Centres:	180