Sales Code: WRSOBP90 **Barcode:** 5056462638140 **Brand:** Hudson Reed **Description:** Hudson Reed 900mm Matt Black Outer Frame Wetroom Screen With Support Bar

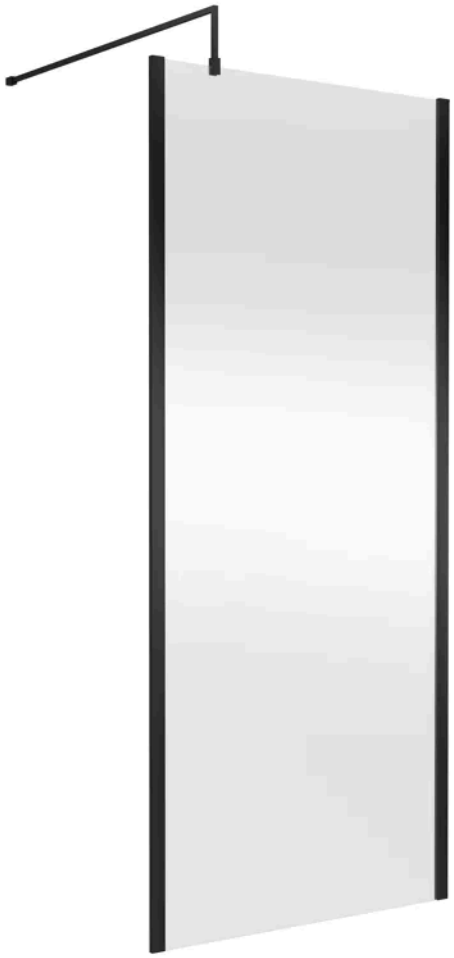

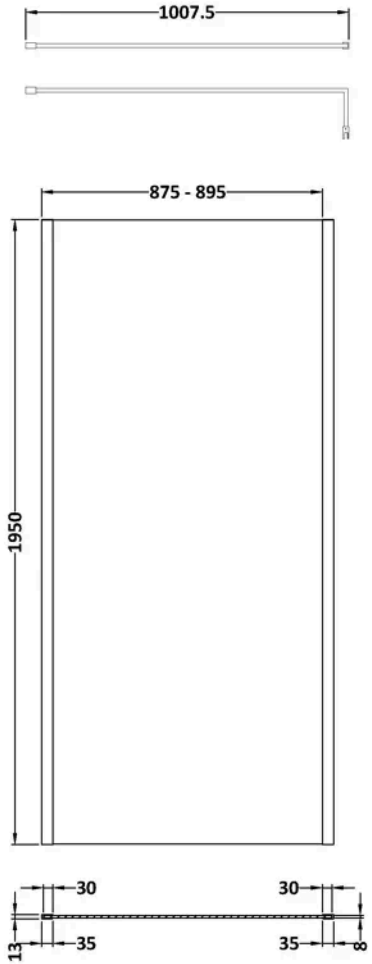

Product Dimensions

Product	1950 x 900 x 14mm (H x W x D)
Packaged	2070 x 950 x 60mm (H x W x D)
Nett Weight	42.48 kg
Packaged Weight	42.98 kg

Product Details

Country of Origin	China
Product Material	Aluminium
Colour/Finish	Matt Black
Style	Contemporary
Easy Clean	Yes
Adjustment Max	900
Adjustment Min	880
Ce Certified	Yes
Declaration Of Performance	Yes
Easy Fit	No
Enclosure Design	Semi-Frameless
Frame Finish	Matt Black
Glass Thickness	8 mm
Handles Included	No
Ukca Certified	Yes

© ROXOR Group

Sales Code: FIX024 **Barcode:** 5056211847342 **Brand:** Hudson Reed **Description:** Matt Black Wetroom Screen Support Arm



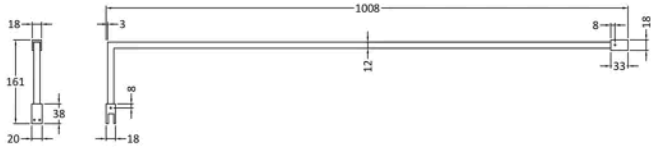

Product Dimensions

Product	15 x 150 x 1000mm (H x W x D)
Packaged	35 x 160 x 1020mm (H x W x D)
Nett Weight	0.67 kg
Packaged Weight	0.7 kg

Product Details

Country of Origin	China
Product Material	Stainless Steel
Colour/Finish	Matt Black
Style	Contemporary

© ROXOR Group

Sales Code: WRSB900G **Barcode:** 5056462620749 **Brand:** OEM **Description:** Missing title

Product Image Not Available

Technical Drawing Not Available

Product Dimensions

Product	1950 x 900 x 8mm (H x W x D)
Packaged	2070 x 950 x 60mm (H x W x D)
Nett Weight	40.3 kg
Packaged Weight	40.3 kg

Product Details

Country of Origin	China
Easy Clean	No
Ce Certified	Yes
Easy Fit	No
Enclosure Design	Frameless
Glass Thickness	8 mm

© ROXOR Group

Sales Code: WRSF004 **Barcode:** 5056211807643 **Brand:** Hudson Reed **Description:** Matt Black 1950mm Wetroom Wall Channel



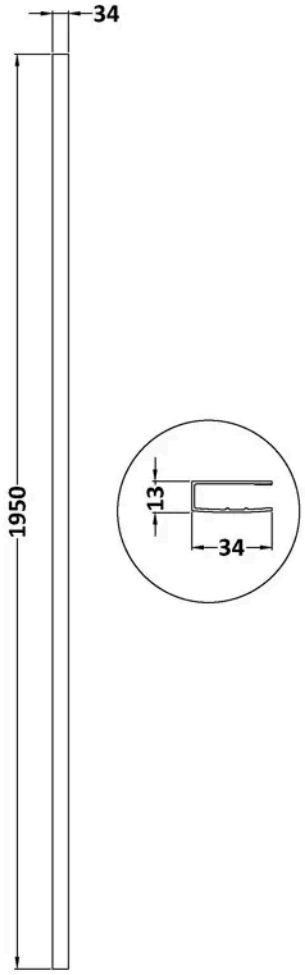

Product Dimensions

Product	1950 x 34 x 13mm (H x W x D)
Packaged	400 x 50 x 1970mm (H x W x D)
Nett Weight	1.01 kg
Packaged Weight	1.42 kg

Product Details

Country of Origin	China
Product Material	Aluminium
Colour/Finish	Matt Black
Style	Contemporary

© ROXOR Group

Sales Code: WRSF004U **Barcode:** 5056462644851 **Brand:** Hudson Reed **Description:** 1950mm W/R DECORATIVE PROFILE UNDRILLED



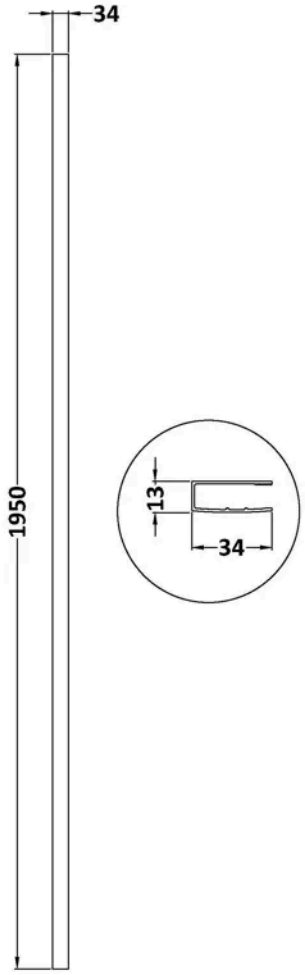

Product Dimensions

Packaged	400 x 50 x 1970mm (H x W x D)
Nett Weight	1.01 kg
Packaged Weight	1.42 kg

Product Details

Country of Origin	China
Colour/Finish	Matt Black

© ROXOR Group