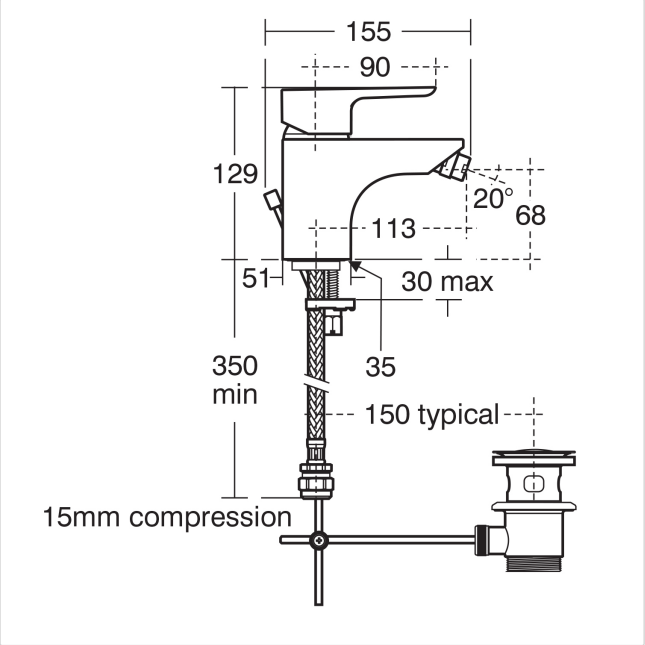

Tempo Bidet Mixer

Illustrated

B0765 Tempo bidet mixer

Configuration options

A5900 TMV Thermostatic mixing valve 15mm

Material

Chrome Plated

Weights

B0765 2.50KG

Colours

Chromium plated (AA)

Flow rates

5 Litres per minute @ 3 bar pressure

Special Notes

Suitable for balanced supplies. Inlets with flexible tails and connections for 15mm copper tubes. Fitted with a 5 lpm outlet flow regulator. When installed in commercial applications a thermostatic blending valve such as A5900AA must be used.

Designer

Artefakt Industriekultur

Frequently used applications

Hotels
Public Building
Office
Residential

Accreditations

Water Label

Email: info@idealspec.co.uk
Tel: 0870 122 8822
Fax: 0870 122 8282
Web: www.idealspec.co.uk

Ideal Standard (UK) Ltd. makes every effort to ensure that the information provided on its website is accurate. However, we cannot guarantee this, and accept no liability for any information or advice given via its website.

Powered by IdealSpec

Date created:30/11/2016