Enzo

Safe Touch Thermostatic Shower

EZ20011CP & EZ20012CP

Installation and Maintenance Instructions

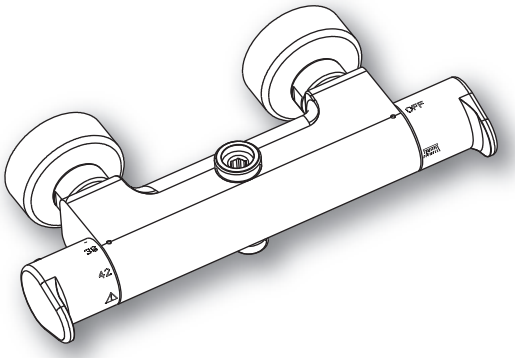

Intatec Ltd
Airfield Industrial Estate
Hixon
Staffordshire
ST18 0PF

Tel: **01889 272 180**
Fax: **01889 272 181**
email: **sales@intatec.co.uk**
web: **www.intatec.co.uk**

In this procedure document we have endeavoured to make the information as accurate as possible.
We cannot accept any responsibility should it be found that in any respect the information is inaccurate or incomplete or becomes so as a result of further developments or otherwise.

© Intatec Ltd. 2013

Introduction

This installation guide has been produced for the Enzo safe touch thermostatic shower. These instructions cover the installation, operation and maintenance. Please read the enclosed instructions before commencing the installation of this product, please note;

We recommend that the installation of any Inta product is carried out by an approved installer.

The installation must be carried out strictly in accordance with the Water Supply (Water Fitting) Regulations 1999 and any local authority regulations.

If in doubt, we would recommend that you contact either your local water authority, the secretary of the Water Regulations Committee at WRc on Tel: 01495 248454 or Institute of Plumbing on Tel: 01708 472791.

All products MUST be re-commissioned to suit site conditions to ensure optimum performance levels of the product are obtained.

Safety

This thermostatic shower must be installed and commissioned correctly to ensure that water is supplied at a safe temperature to suit the users.

43°C is the maximum mixed water temperature from a shower mixer. The maximum temperature takes account of the allowable tolerances inherent in thermostatic shower mixers and temperature losses.

It is not a safe washing Temperature for adults or children.

The British Burns Association recommends 37 to 37.5°C as a comfortable washing temperature for children. In premises covered by the Care Standard Act 2000, the maximum mixed water outlet temperature is 43°C.

Products

Enzo Safe Touch Thermostatic Shower with optimo telescopic riser, overhead soaker, slim eco air handset and fast fix brackets.	EZ20011CP
Enzo Safe Touch Thermostatic Shower with alto riser, overhead soaker, slim eco air handset and fast fix brackets.	EZ20012CP
Enzo Safe Touch Thermostatic Shower with optimo telescopic riser, applewhite overhead soaker, handset and fast fix brackets.	EZ20011AW
Enzo Safe Touch Thermostatic Shower with alto riser, applewhite overhead soaker, handset and fast fix brackets.	EZ20012CP

Check Content

Before commencing remove all components from packaging and check each component with the contents list.

Ensure all parts are present, before discarding any packaging. If any parts are missing, do not attempt to install your Inta shower valve until the missing parts have been obtained.

© Intatec Ltd 2013

Components

Item	Qty	Component
1	1	Body
2	2	Union nut
3	2	Check valve retaining bush
4	2	Check valve
5	2	Connector/check valve housing
6	2	Filter sealing washer
7	2	Concealing plate
8	2	Compression face
9	2	Olive
10	2	Wall Bracket

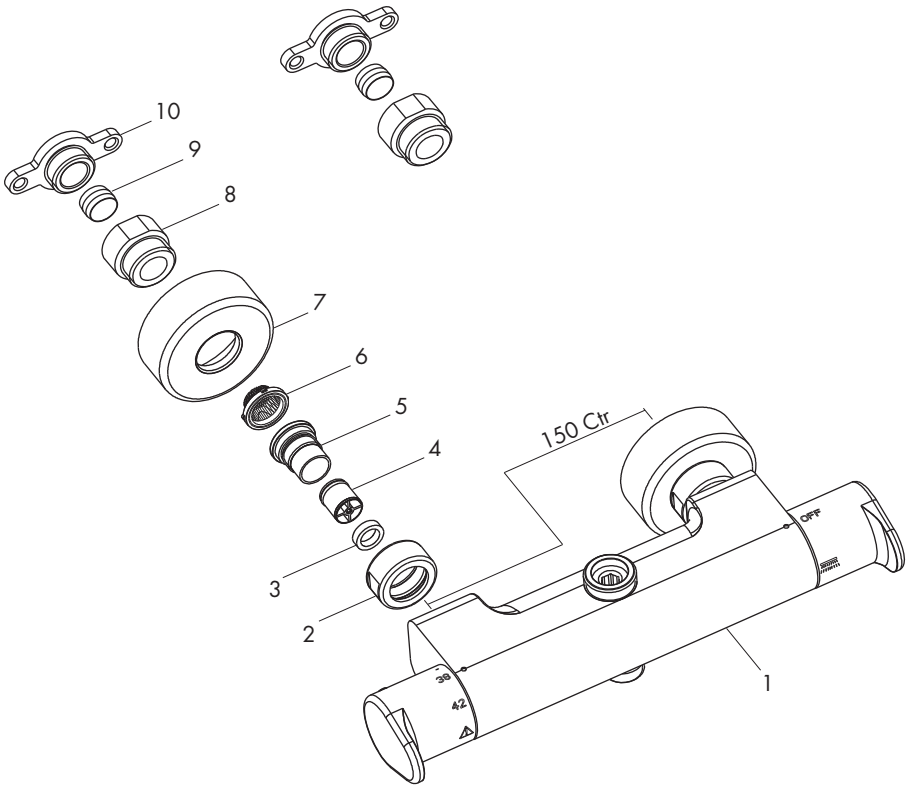

© Intatec Ltd 2013

Technical Data

The Inta Enzo thermostatic shower valve is suitable for installations on all types of plumbing system, including gravity supplies, fully pumped, modulating combination boiler, unvented water heater and unbalanced supplies i.e. Cold Mains & Tank Fed Hot. They are not suitable for non-modulating combination boilers.

Max Inlet Pressure (Static)		10 bar	Max Inlet Temperature	85°C
Max Inlet Pressure (Dynamic)		5 bar	Pre Set Factory Temp Setting	38°C
Min Operating Pressure (Dynamic)		0.4 bar	Temperature Stability	±2°C
Max Unbalanced Pressure Ratio		5:1	Min Temp Differential to	
Inlet Connections (Body only)		15mm	ensure fail-safe between hot	
Outlet Connection	Top	G¾"	and cold supplies	10°C
	Bottom	G½"		

Unvented Mains Pressure System

The drawing shows a typical installation of a shower mixing valve in conjunction with an unvented hot water system. This type of installation must be carried out in accordance with Part G of the Building Regulations.

Whilst pressures are theoretically equal (balanced) most unvented hot systems have a pressure reducing valve on the incoming cold water prior to the hot water storage vessel. This means that the hot and cold pressures can be significantly different.

Most unvented systems use an inlet manifold located directly after the pressure reducing valve.

It is recommended that the cold supply be taken from one of the outlets of the manifold directly to the shower as an independent supply.

For systems without a manifold unit after the pressure reducing valve and where the cold water supply pressure is significantly higher than the hot supply we recommend that a separate pressure reducing valve is fitted to the cold supply, as close as possible to the shower valve and with no draw off points between it and the shower valve.

Flow regulators are required for installations where a PRV is not fitted to ensure simultaneous demand is accounted for.

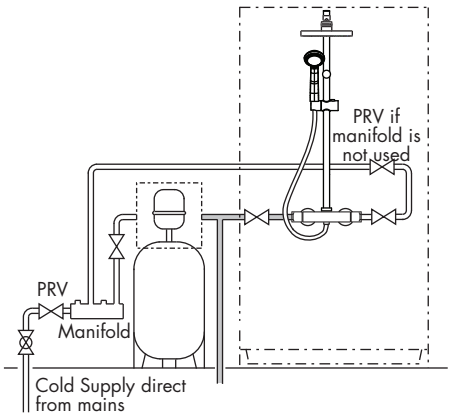

© Intatec Ltd 2013

Pumped Systems

Pumped systems use a booster pump to increase the pressure of the gravity fed water supplies.

These booster pumps are used where the head of water is insufficient to provide a satisfactory shower or where a high performance shower is required.

Please ensure that the performance of the pump is matched to suit the shower.

Follow the instructions for gravity fed installations taking into account the installation requirements of the pump.

Ensure that the hot and cold water storage capacity is sufficient to supply the shower and any other draw off points that may be used simultaneously.

Most pumps require a minimum head of water to allow the flow switches to operate automatically. Where this is not available a negative head kit may be required to operate the pump.

Please consult the pump manufacturer's installation requirements.

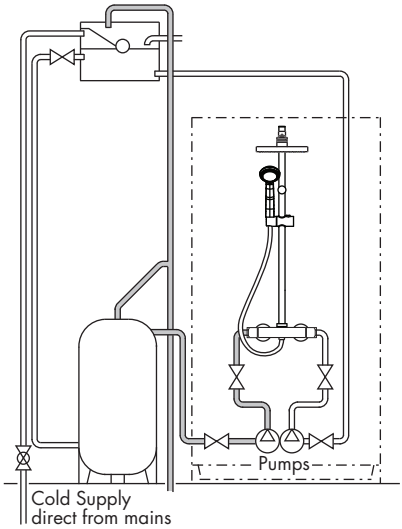

Modulating Combi Boiler / Instantaneous Gas Water Heater

The drawing shows a typical installation of a shower valve in conjunction with a combination boiler.

Combi boilers will produce a constant flow of water at a temperature within its operating range. However we recommend that the system should supply hot water in excess of 60°C.

The hot water flow rates are dependant upon the type of boiler / heater used and the temperature rise required to heat the cold water to the required temperature.

The cold water flow rates may be much greater as they are generally unrestricted from the mains cold water supply. To ensure relatively balanced flow rates, we recommend that a pressure reducing valve or 6 l/min flow regulator is fitted in the cold water supply pipe.

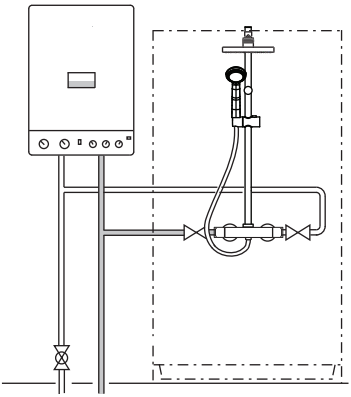

© Intatec Ltd 2013

Gravity System

The drawing shows a typical installation of a shower valve on a gravity supplied system.

Please note the minimum head pressure required to ensure operation of the valve.

In accordance with good plumbing practice, we recommend that a totally independent hot and cold water supply be taken to the valve.

The cold water supply must be connected directly to the water cistern. The hot water supply should be connected to the hot water cylinder via an Essex flange or Sussex flange or to the vent or a draw off pipe as close as possible to the top of the cylinder.

For equal tank fed pressures there is no need to fit the flow regulators. This installation is the recommended minimum for gravity supplies. For systems with less than 4 metre head pressure, we recommend that a suitable booster pump is fitted to increase the supply pressure.

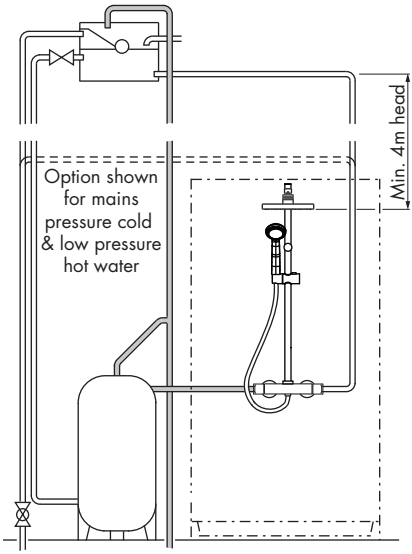

Cold Mains & Gravity Hot Supplies

If the cold supply to the shower is direct from the cold water mains and the hot water supply is gravity fed from the cold water cistern via the hot water cistern you MUST fit a pressure reducing valve or a 6 l/min flow regulator.

© Intatec Ltd 2013

Site Preparation

It is important to plan the installation thoroughly to suit site conditions before commencing.

- Before commencing the installation ensure site conditions are suitable.
- The shower mixing valve is designed for concealed pipework, whether in a solid or studded wall.
- The thickness of wall tiles, plaster or plaster board should all be considered when routing the hot and cold supply pipes.
- The supply pipes can come from below, above, or the side before protruding through the wall brackets and if not embedded into the wall with plaster should be fixed securely to the studding.
- The valve requires the wall brackets to have 150mm centres and sufficient copper pipe must protrude through the wall bracket to make a water tight joint using the olive and compression face.
- Ensure the shower valve will be horizontal when installed.
- The wall brackets must be secured firmly to the wall or to the studding in a cavity wall.
- The whole system should be thoroughly flushed, prior to the connection of the hot and cold water supplies to the shower mixing valve, to remove any debris that may be in the supply pipework.
- Ensure there are no joint leaks before finishing the wall.
- Isolation valves must be fitted in an accessible position to both the hot and cold supplies should the valve need to be isolated in the future for servicing.

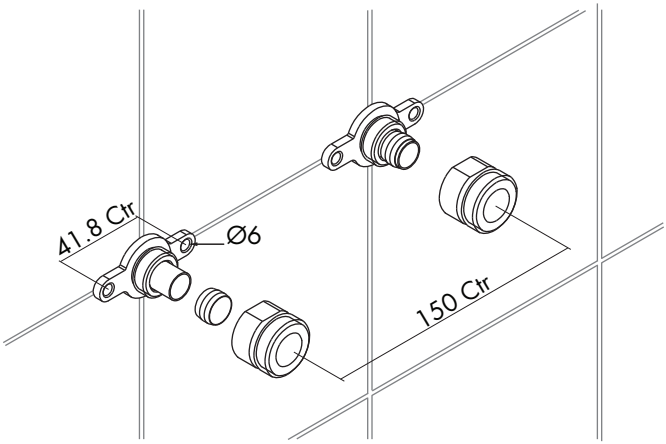

© Intatec Ltd 2013

Fitting the Brackets

- Apply silicone sealer to the back of both wall brackets, fit to the 2 protruding copper pipes, press to the wall and secure both brackets with 2 counter sunk screws.
- Add the olives and then the compression faces and tighten until water tight joints are made.
- Apply a bead of silicone sealer around the inside edge of the concealing plates, position over the compression faces and press firmly to the wall.

Installing the Shower Valve

- Fit the shower valve to the wall bracket assemblies using the sealing washers (2) and using a suitably sized spanned, tighten the union nuts taking care not to damage the finish on the shower valve, do not over tighten.
- Turn on the water supplies and check that all joints are water tight.

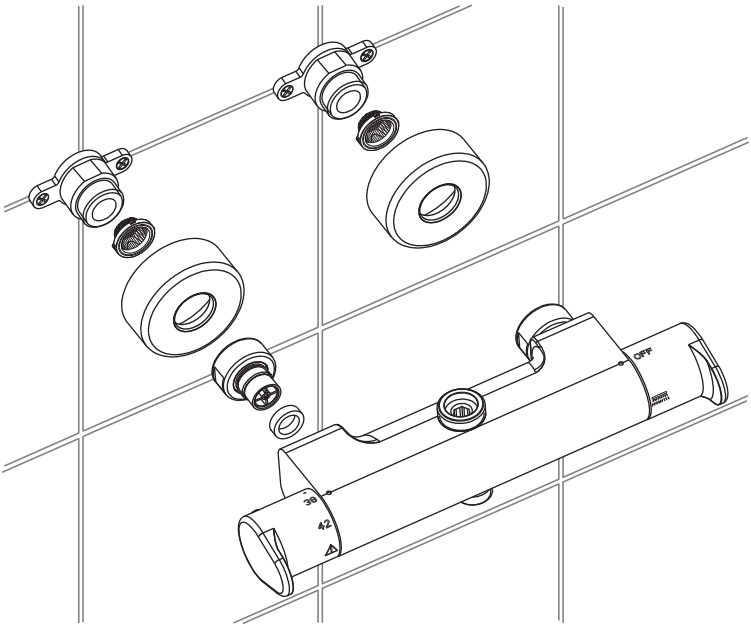

© Intatec Ltd 2013

Calibration

The Inta Enzo shower valve has a factory set outlet temperature of 38°C via the security setting. This is based on a balanced supply pressure and a stable hot water inlet temperature of 65°C.

However, the calibration point **MUST** be checked and re-set as necessary to suit site conditions.

Care must be taken when re-calibrating the valve as **INCORRECT CALIBRATION CAN CAUSE INJURY.**

- Remove the temperature control knob (2) by pulling away from the shower valve, the gear drive (3) and the temperature stop ring (4).
- Fully open the flow control (1) and allow the outlet temperature to stabilise.
- Temporarily refit the control knob (2) and using a digital thermometer it is possible to increase or reduce the mixed water outlet temperature until 38°C is re-established, by slowly rotating the control knob.
- Remove the control knob (2) and refit the temperature stop ring (4) onto the splined section of the cartridge. The red dot on the temperature stop ring must align with the temperature position symbol (6) on the valve body.
- Refit the gear drive (3).
- Refit the temperature control knob in the reverse order ensuring that rib on the control knob is in line with the temperature position symbol (6).

PLEASE NOTE THAT ONCE CALIBRATED, THE SECURITY SETTING WILL ONLY BE 38°C UNDER THE SUPPLY CONDITIONS USED FOR CALIBRATION.

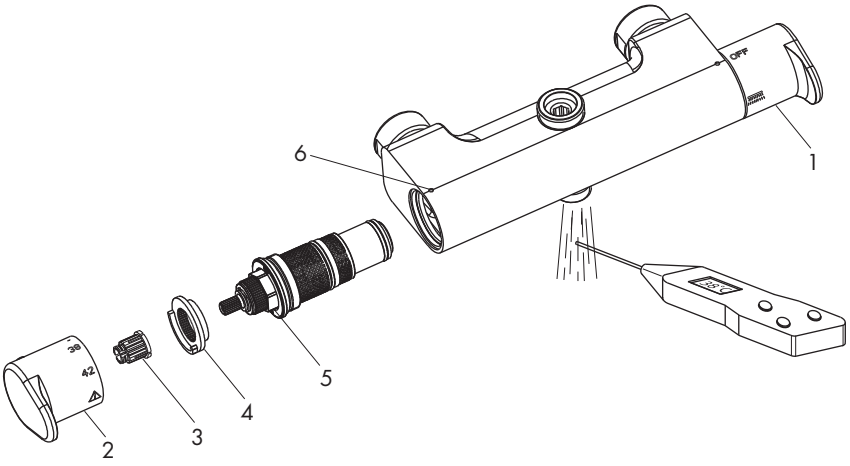

© Intatec Ltd 2013

Cartridge Replacement

- Isolate both the hot and cold water supplies
- Remove the temperature control knob (2) by pulling away from the shower valve, the gear drive (3) and the temperature stop ring (4).
- Using a suitable spanner unscrew the cartridge (5).
- Replace with a new cartridge.
- Refit the temperature stop ring (4) onto the splined section of the cartridge. The red dot on the temperature stop ring must align with the temperature position symbol (6) on the valve body.
- Refit the gear drive (3).
- Refit the temperature control knob in the reverse order ensuring that the rib on the control knob is in line with the temperature position symbol (6).
- The shower valve must be re-calibrated after fitting the new cartridge following the procedure above.

Aftercare

Inta shower mixing valves have a high quality finish and should be treated with care.

An occasional wipe with a mild washing-up liquid on a soft damp cloth followed by a thorough rinsing is all that is required.

The nozzles in the hand set or overhead soaker should be cleaned periodically to remove any build up of debris or deposits which may affect the performance of the shower.

Do not use an **abrasive** or **chemical household cleaner** as this may **cause damage**.

Spares

A full range of spares are available for this product.

PLEASE NOTE: Only genuine spares should be used.

© Intatec Ltd 2013

Problem Solving

The following details are supplied for on site queries, should you require any further assistance our Technical Department can be contacted directly on 01889 272199.

Fault	Solution
Showering temperature is not hot enough.	Ensure the hot water supply is at a constant temperature above 60°C. Check for air locks in the pipework.
The water goes cold during showering.	Insufficient stored hot water. When used with a combi boiler confirm that the boiler is still firing. Adjust the boiler to a minimum setting of 65°C which may not necessarily be the best flow rate.
When the water is set at cold, the showering temperature is too hot.	The hot and cold supply connections have been made in reverse.
The maximum showering temperature is too hot or when set to hot water runs to cold.	Check the commissioned maximum temperature of the shower valve. Check the connections to the valve have not been made in reverse.
The flow of water from the shower valve is low.	Check the filters are clean and the supply pressure is above 0.4 bar.
No flow of water	Ensure the valve has not fail-safed and check that there is hot and cold water flow to the valve. Ensure the check valves are not closed.

© Intatec Ltd 2013

Telescopic Riser Rail - Components

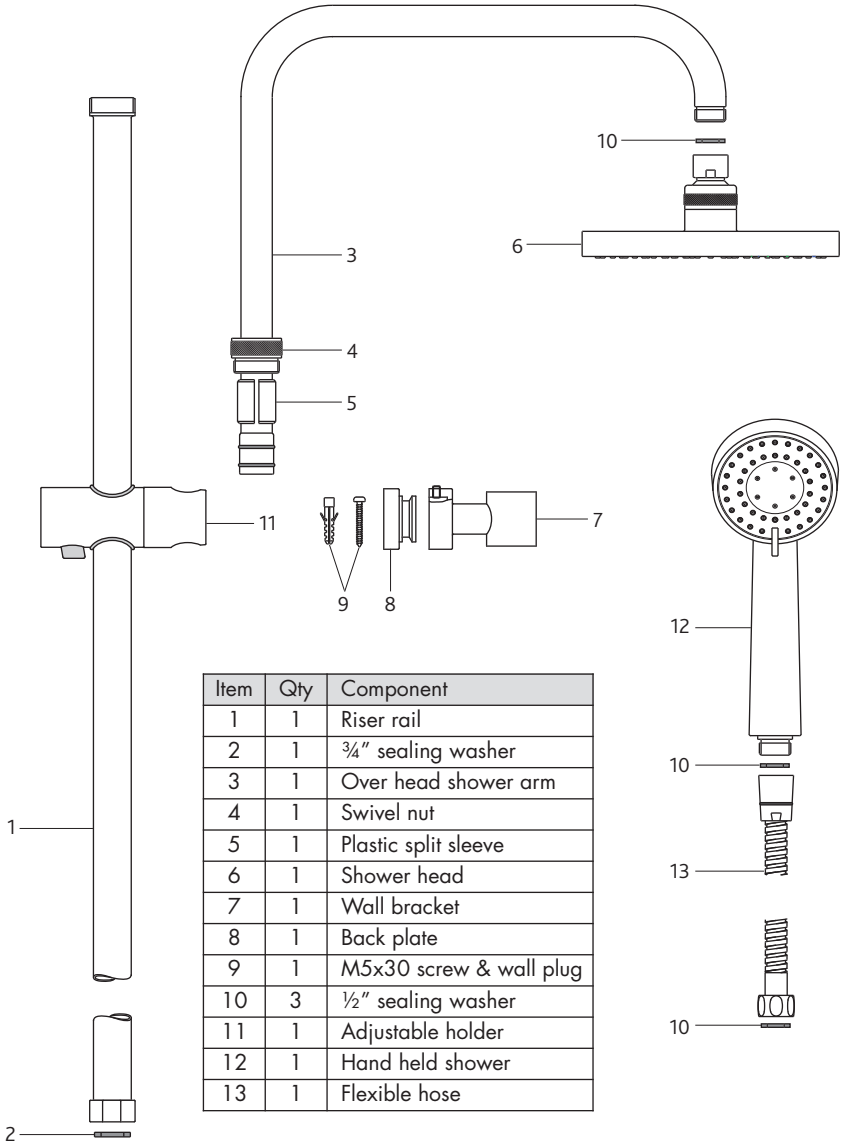

Item	Qty	Component
1	1	Riser rail
2	1	¾" sealing washer
3	1	Over head shower arm
4	1	Swivel nut
5	1	Plastic split sleeve
6	1	Shower head
7	1	Wall bracket
8	1	Back plate
9	1	M5x30 screw & wall plug
10	3	½" sealing washer
11	1	Adjustable holder
12	1	Hand held shower
13	1	Flexible hose

NOTE: drawing for illustration purposes only.

© Intatec Ltd 2013

Telescopic Riser Rail - Installation

Fit the shower valve and finish tiling the wall prior to installing the shower riser.

Ensure that the outlet from the fixed shower will be over a suitable shower tray or bath.

Screw the riser rail tightly into the wall bracket. The riser rail is screwed into the opposite side from the grub screw.

Locate the back plate into the wall bracket.

Using the ¾" sealing washer assemble the riser rail to the shower valve and position the back plate onto the wall ensuring the riser rail is vertical.

Mark round the wall brackets with a removeable marker onto the wall.

Remove the riser rail and the back plate.

Reposition the back plate onto the wall within the markings and using the elongated hole as a template, drill a 6mm diameter hole.

If drilling into ceramic tiles use a ceramic bit.

To avoid cracking ensure the wall plug is pushed all the way behind the ceramic tile.

The back plate has an elongated hole allowing 3mm of vertical adjustment.

Using the screw provided secure the back plate firmly to the wall. This is the main fixing screw for the riser and shower so must be held securely by the plastic plug in the wall.

If the wall is plaster board or soft building block use special wall plugs obtainable from most DIY stores.

Telescopic Riser Rail - Assembly

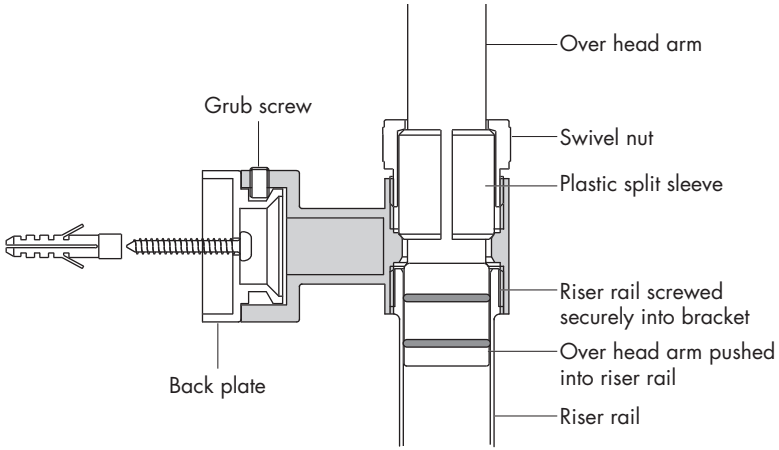

© Intatec Ltd 2013

Telescopic Riser Rail - Dimensions

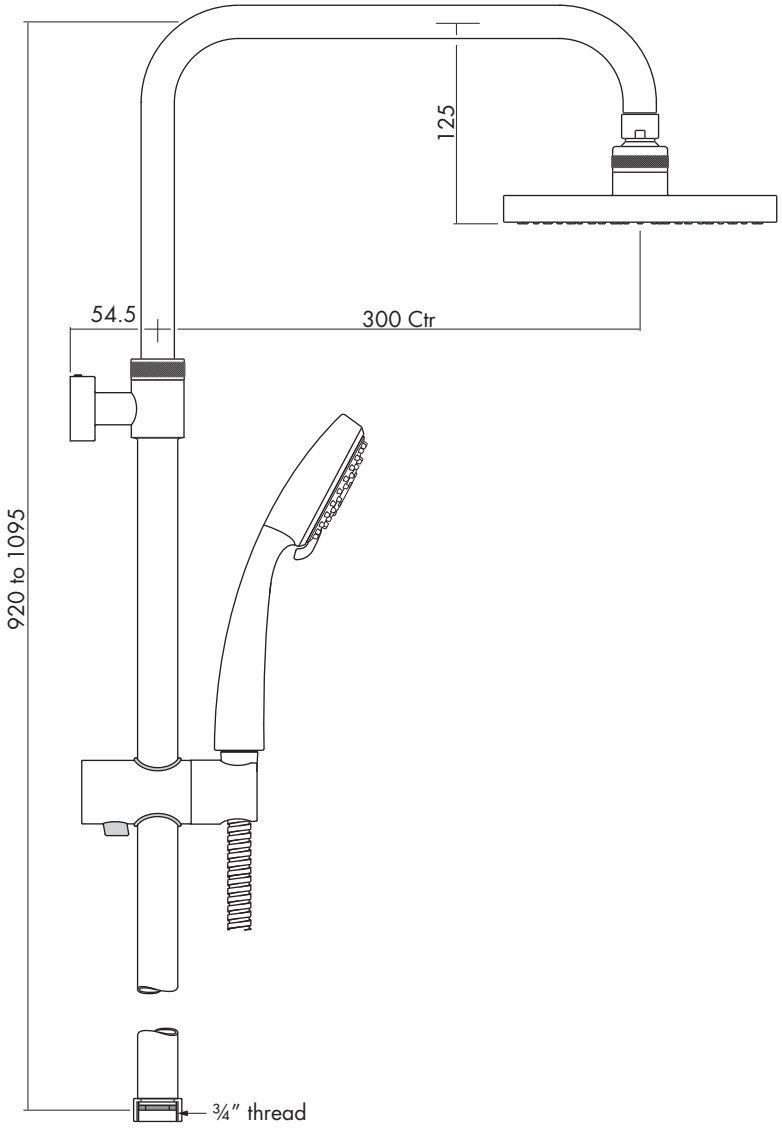

NOTE: drawing for illustration purposes only.

© Intatec Ltd 2013

Telescopic Riser Rail - Assembly

Fit the fixed shower head to the arm using a ½" sealing washer and tighten the retaining nut to hold secure.

Push the shower arm into the riser rail as shown taking care not to damage the two 'O' rings.

Push the plastic split sleeve into the bracket and hand tighten the swivel retaining nut.

Note: The plastic split sleeve is an important part of the gripping mechanism and must be located correctly in the wall bracket, this is not a packaging component.

Fit the shower assembly to the back plate and shower valve using the ¾" sealing washer.

The shower assembly should locate easily onto the back plate and shower valve, if not loosen the retaining screw and reposition the backplate.

Tighten the ¾" nut securing the riser rail to the shower valve to make a water tight joint and the grub screw to secure the wall bracket to the back plate.

Hold the riser rail in one hand and push the shower arm to the required height and position with the other, once in the correct position tighten the swivel nut to hold in the set position.

If used with a dual outlet shower valve connect the hand shower to the flexible hose and the hose to the appropriate outlet on the shower valve, ensure the ½" sealing washers are fitted.

Turn on the water supply and check joints for leakage.

Height Adjustment

The height and position of the overhead shower arm may be adjusted at any time by loosening the swivel nut, adjusting the arm to increase or reduce the height of the shower head or by rotating it's position.

Re-tighten the swivel nut to hold secure.

Fixed Riser Rail - Installation

Fit the shower valve and finish tiling the wall prior to installing the shower riser.

Ensure that the outlet from the fixed shower will be over a suitable shower tray or bath.

Loosely assemble the locating adjuster and wall bracket.

Using the ¾" sealing washer assemble the riser rail to the shower valve and position the locating adjuster/wall bracket onto the riser rail.

Locate the wall bracket onto the wall ensuring that the riser rail is vertical.

Mark round the wall brackets with a removeable marker onto the wall.

Remove the riser rail and the locating adjuster/wall bracket.

Position the back plate onto the wall within the markings and using the elongated hole as a template, drill a 6mm diameter hole.

© Intatec Ltd 2013

Fixed Riser Rail - Components

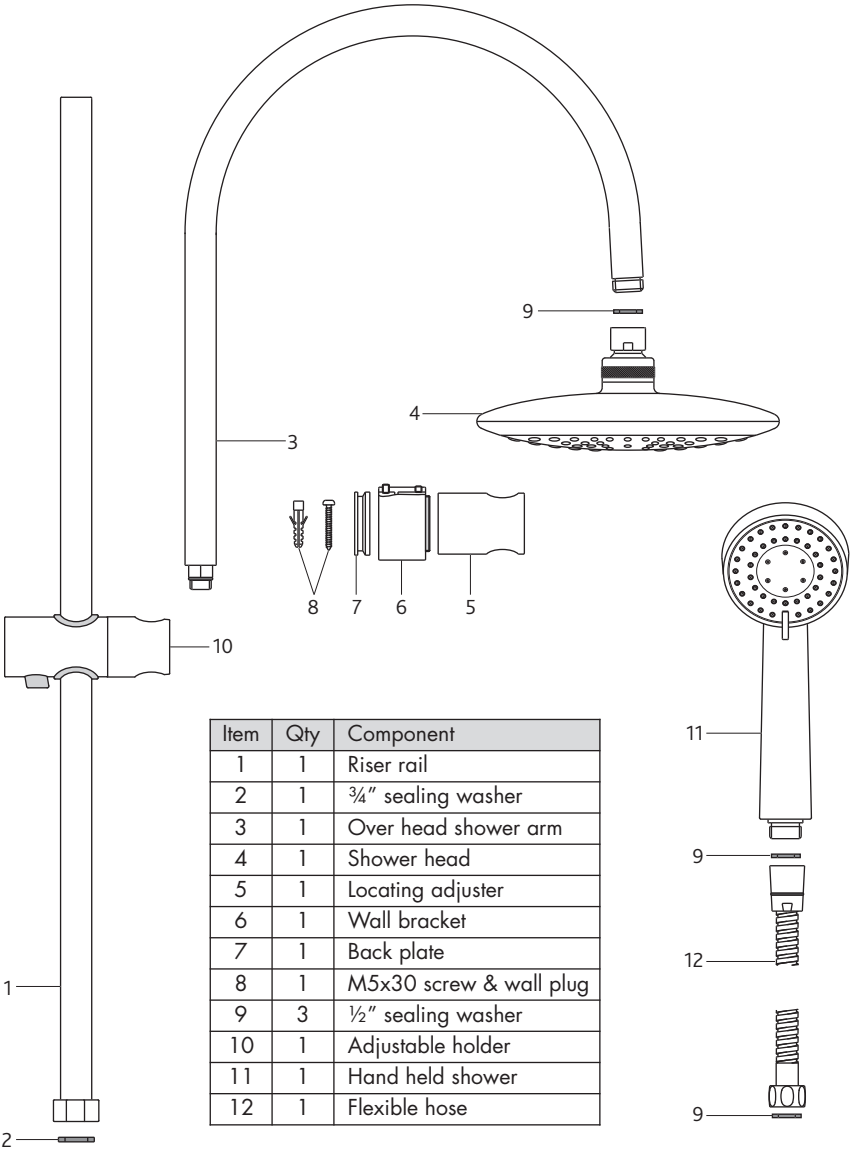

Item	Qty	Component
1	1	Riser rail
2	1	¾" sealing washer
3	1	Over head shower arm
4	1	Shower head
5	1	Locating adjuster
6	1	Wall bracket
7	1	Back plate
8	1	M5x30 screw & wall plug
9	3	½" sealing washer
10	1	Adjustable holder
11	1	Hand held shower
12	1	Flexible hose

NOTE: drawing for illustration purposes only.

© Intatec Ltd 2013

Fixed Riser Rail - Installation

If drilling into ceramic tiles use a ceramic bit.

To avoid cracking ensure the wall plug is pushed all the way behind the ceramic tile.

The back plate has an elongated hole allowing 3mm of vertical adjustment.

Using the screw provided secure the back plate firmly to the wall. This is the main fixing screw for the riser and shower so must be held securely by the plastic plug in the wall.

If the wall is plaster board or soft building block use special wall plugs obtainable from most DIY stores.

Fixed Riser Rail - Assembly

Fit the fixed shower head to the arm using a ½" sealing washer and tighten the retaining nut to hold secure.

Locate the hexagonal section of the over head arm into the hexagonal hole of the locating adjuster ensuring the overhead arm will be in the correct position over the shower tray.

Locate the riser rail into the opposite hole of the locating adjuster and screw onto male thread of the overhead arm until tight.

Note: there will be small amount of vertical movement available between the locating adjuster and the hexagonal section of the over head arm.

Tighten the securing screw to hold the over head arm firmly to the locating adjuster.

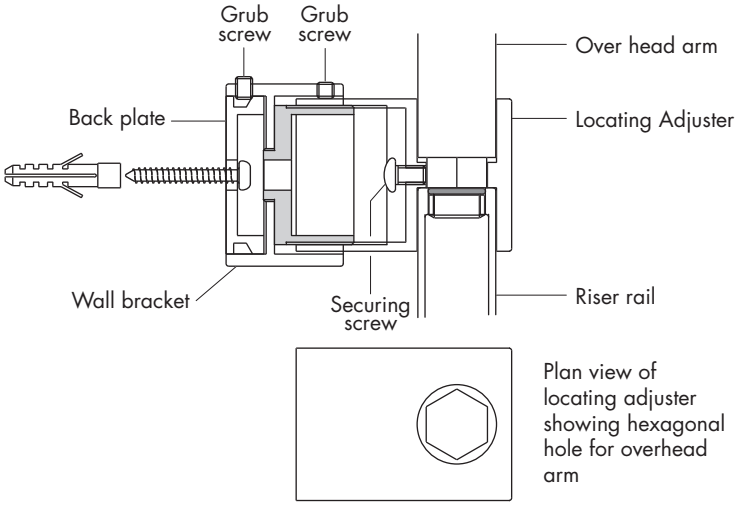

© Intatec Ltd 2013

Fixed Riser Rail - Dimensions

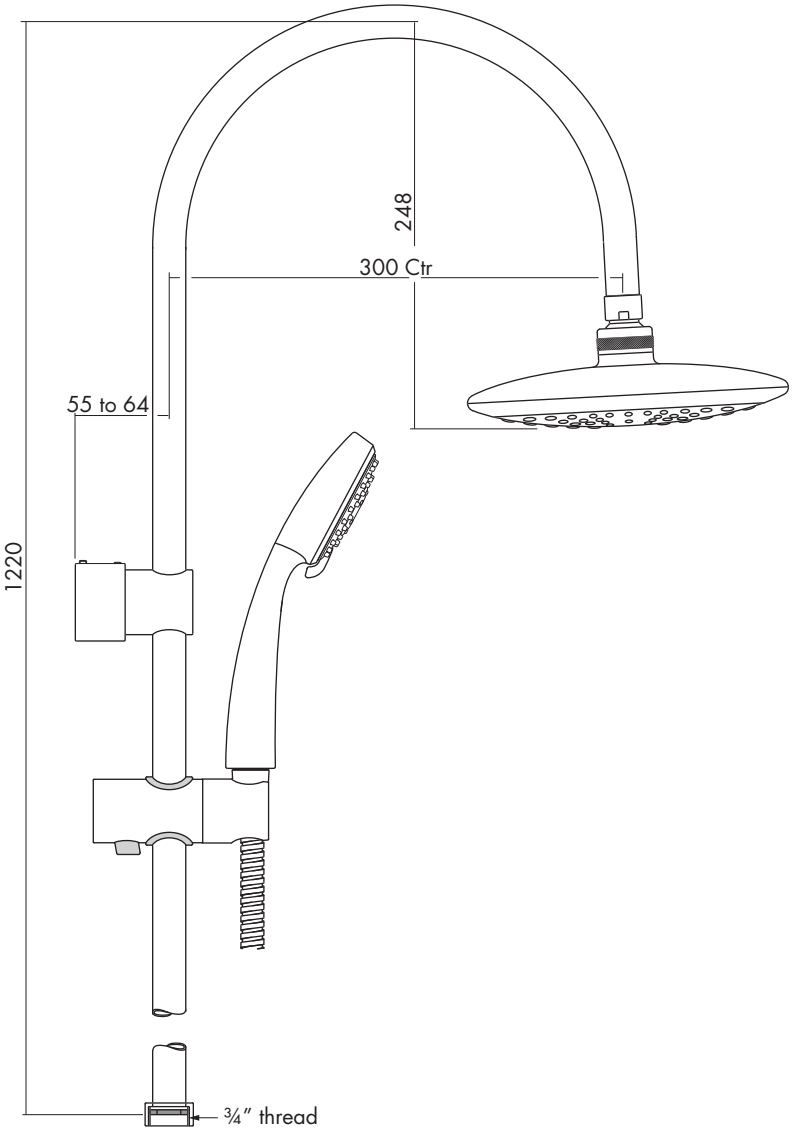

NOTE: drawing for illustration purposes only.

© Intatec Ltd 2013

Fixed Riser Rail - Assembly

Screw the wall bracket onto the locating adjuster.

Fit the shower assembly to the back plate and shower valve using the ¾" sealing washer.

The shower assembly should locate easily onto the back plate and shower valve, if not loosen the retaining screw and reposition the backplate.

Tighten the ¾" nut securing the riser rail to the shower valve to make a water tight joint.

Rotate the wall bracket until the riser rail is vertical and the correct distance for the wall.

With the 2 grub screws upper most tighten both screws to hold the assembly secure and prevent any further rotation of the wall bracket.

If used with a dual outlet shower valve connect the hand shower to the flexible hose and the hose to the appropriate outlet on the shower valve, ensure the ½" sealing washers are fitted.

Turn on the water supply and check joints for leakage.

© Intatec Ltd 2013

IMPORTANT

The following information is required when the thermostatic shower valve is used in a TMV2 Applications under the requirements of BS EN 1111: 1999 "Sanitary tapware – Thermostatic Mixing Valve (PN 10) – General Technical Specification"

Supply Conditions / Technical Specification

The supply conditions to the Thermostatic Shower Valve must comply with the following;

Conditions	High Pressure ~ BS EN 1111
Maximum Static Pressure	10 bar
Flow Pressure, Hot & Cold	0.5 to 5 bar
Hot Supply Temperature	55 to 65˚C
Cold Supply Temperature	≤ 25˚C
Temperature Stability	± 2˚C
Min Temp Differential (Mix to Hot) for fail-safe	10˚C
Max. Pressure Inlet Differential	5:1

Note: Valves operating outside these conditions cannot be guaranteed by the Scheme to operate as type 2 valves.

- The valves designation of use, **HP** tested against BS EN 1111.
- For valves designated for use HP only, if a water supply is fed by gravity then the supply pressures should be verified to ensure the conditions of use are appropriate for the valve.

Introduction

The Inta range of thermostatic shower mixers have been specifically designed and manufactured to meet the requirements of BS EN 1111: 1999, BS EN 1287: 1999 and TMV2 Type Scheme. The valve has been independently tested and approved as a TYPE 2 valve under the Buildcert TMV2 scheme by the NSF-WRc Limited/Buildcert Limited.

Application

The thermostatic shower mixer has been independently tested by WRc and certified as meeting the requirements of the BS EN 1111:1999 and under the TMV2 Scheme as being suitable for use on the following designations.

Shower **HP**

© Intatec Ltd 2013

Recommended Outlet temperatures

The BuildCert TMV scheme recommends the following set maximum mixed water outlet temperature for use in all premises:

Application	Recommended Hot Water Temperature
Shower	41°C

The mixed water temperature must never exceed 43°C.

The maximum mixed water temperature can be 2 °C above the recommended maximum set outlet temperature.

Note: 43°C is the maximum mixed water temperature from a shower mixer. The maximum temperature takes account of the allowable tolerances inherent in thermostatic shower mixers and temperature losses.

It is not a safe bathing Temperature for adults or children.

The British Burns Association recommends 37 to 37.5°C as a comfortable bathing temperature for children. In premises covered by the Care Standard Act 2000, the maximum mixed water outlet temperature is 43°C.

Installation

Important: - The following instructions must be read prior to the installation of the thermostatic shower valve. The installer of the thermostatic shower valve must comply with the requirements of the Water supply (Water Fittings) Regulations 1999 and also be aware of their responsibility and duty of care to ensure that all aspects of the installation comply with the regulations.

It has been brought to our attention that flushing water systems using certain chemicals may wholly or partially remove the lubricant from the internal workings of the valve, which may adversely affect its performance. We recommend that following flushing the system with chemicals; valves are checked for correct operation.

1 It is essential that before installing any thermostatic shower valve to ensure that the supply conditions of the system to which the valve is intended to be fitted are checked to confirm compliance with the parameters as quoted within the technical specification and conditions on which the approval is granted i.e. verify supply temperatures, supply pressures, risk assessment.

2 Consideration must be made for the possibility of multiple / simultaneous demands being made on the supply system whilst the thermostatic shower valve is in use, all practical precautions must be made to ensure that the valve is not affected. Failure to make provision within the pipe sizing etc. will affect the performance of the shower valve.

© Intatec Ltd 2013

Installation

3 The supply to which the thermostatic shower valve is to be installed must be thoroughly flushed and cleaned to remove any debris, which may have accumulated during the installation. Failure to remove any debris will affect the performance and the manufacturer's warranty of the product. In areas that are subject to aggressive water, provision must be made to treat the supplies prior to the supplies entering the shower valve.

4 The thermostatic shower valve has been designed for horizontal installation and surface mounting.

5 The thermostatic shower valve will be installed in such a position that maintenance of it's components, associated valves and the commissioning and testing of the shower valve can be undertaken.

6 The hot and cold water supplies must be connected to the valve strictly in accordance with the indications on the body of the valve i.e. hot water supply to the hot port of the valve.

7 In a situation where one or both of the water supplies are excessive, it is recommended to fit a Pressure Reducing Valve to reduce the pressure(s) to within the limits as quoted previously.

8 Any thermostatic shower valve must be fitted with a back flow prevention device, such as check valves to prevent the cross contamination of supplies. The thermostatic shower valve is supplied complete with integral insert check valves and strainers.

9 Isolation valves in an accessible position are required as close as is practicable to the water supply inlets of the thermostatic shower valve.

10 The fitting of strainers is recommended as close as is practicable to the water supply inlets of the thermostatic shower valve.

11 It is essential that the fail safe thermostatic shower valve should not be installed in situations where there is a possibility of the valve being deprived of water or where demands for water are greater than the actual stored supplies.

12 To ensure that the performance levels of the thermostatic shower valve are maintained (in the event of cold water failure), the temperature of the hot water supply at the point of entry to the thermostatic shower valve must be a minimum of 10°C above the commissioned mixed water discharge temperature.

13 The fail-safe thermostatic shower valve must not be subject to any extreme temperature variations either during the installation or under normal operating conditions.

Commissioning

Important: - The following instructions must be read and understood prior to commissioning the thermostatic shower valve. If under any circumstances there are aspects to the installation / system which do not comply with the specification laid down, the valve **MUST NOT** be put into operation until the system / installation complies with the specification. However if all these conditions are met, proceed to set the temperature as follows;

1 Ensure that the system is thoroughly cleaned and free from any debris prior to commissioning the thermostatic shower valve.

© Intatec Ltd 2013

Commissioning

2 Commissioning the temperatures must be carried out using a suitably calibrated thermometer, preferably a digital thermometer. The sensing part of the thermometer probe must be fully submerged in the water when testing.

3 The valve must be commissioned taking into consideration any fluctuations, which may occur within the system due to simultaneous demands. It is advisable that any outlets which are connected to the same supply as the shower valve are open during setting of the mixed water temperature. It is advisable to ensure that the water temperatures are established before any attempt to commission.

4 Once the supply temperatures are stable and the normal operating conditions are established, the shower valve can be commissioned. The following sequence should be followed when commissioning the valve;

4.1 The first step in commissioning a thermostatic shower valve is to check the following:

- The designation of the thermostatic shower valve matches the application
- The supply pressures are within the valve's operating range.
- The supply temperatures are within the valve's operating range.
- Isolating valves (and 'Y' strainers preferred) are provided.

4.2 If all these conditions are met, proceed to set the temperature following the procedure described earlier in the Calibration section.

4.3 Measure and record the temperature of the hot and cold water supplies at the connection to the valve.

4.4 Measure and record the temperature of the water discharging from the valve.

4.5 Isolate the cold water supply to the valve and monitor the mixed water temperature.

4.6 Measure and record the maximum mixed water temperature and the final temperature. The final temperature found during the test should not exceed the values quoted.

4.7 Record all the equipment used during the commissioning.

4.8 The mixed water temperature at the terminal fitting must never exceed 2°C above the set temperature.

5 If the mixed water temperature exceeds the recommended temperature of 41°C by 2°C or does not reach 41°C the shower valve can be adjusted as follows:

5.1 With stable supply conditions remove the temperature control knob.

5.2 Rotate the temperature control knob by one spline clockwise to increase the temperature and one spline anticlockwise to reduce it.

5.3 Measure the water discharging from the shower.

5.4 Repeat 5.2 until the desired temperature is stabilised and record the temperature.

5.5 Repeat 4.4 and 4.5

5.6 Secure the temperature control knob with the retaining screw and re-fit the cover.

© Intatec Ltd 2013

Commissioning

6 The above information must be recorded and updated on every occasion when any work is carried out on the valve.

In Service Testing

It is a requirement that all TMV2 approved valves shall be verified against the original set temperature results once a year. When commissioning / testing is due the following performance checks shall be carried out.

1 Measure the mixed water temperature at the outlet.

2 Carry out the cold water supply isolation test by isolating the cold water supply, wait for five seconds if water is still flowing check that the temperature is below 43˚C.

3 If there is no significant change to the set outlet temperature (±2˚C or less from the original settings) and the fail-safe shut off is functioning, then the valve is working correctly and no further service work is required.

Notes:

- If there is a residual flow during the commissioning or the annual verification (cold water supply isolation test), then this is acceptable providing the temperature of the water seeping from the valve is no more than 2˚C above the designated maximum mixed water outlet temperature setting of the valve.
- Temperature readings should be taken at the normal flow rate after allowing for the system to stabilise.
- The sensing part of the thermometer probe must be fully submerged in the water to be tested.
- Any thermostatic shower that has been adjusted or serviced must be re-commissioned and re-tested in accordance with the manufacturers' instructions

Please leave this Manual for the User

To active your product warranty please visit

www.intatec.co.uk

and click on Product Registration

Intatec Ltd
Airfield Industrial Estate
Hixon
Staffordshire
ST18 0PF

Tel: **01889 272 180**
Fax: **01889 272 181**
email: **sales@intatec.co.uk**
web: **www.intatec.co.uk**

E & O.E

© Intatec Ltd 2013

25-06-13