TECHNICAL DATA SHEET

ROXOR

CERAMICS

Sales Code: BU12132

Description: Butler Sink C/W Of & Tl 795X500x220

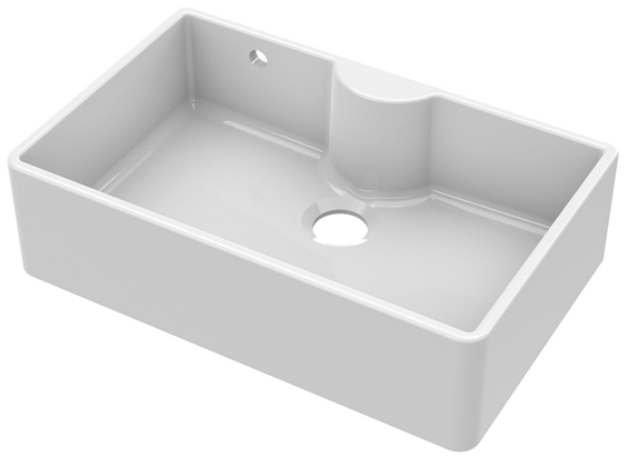

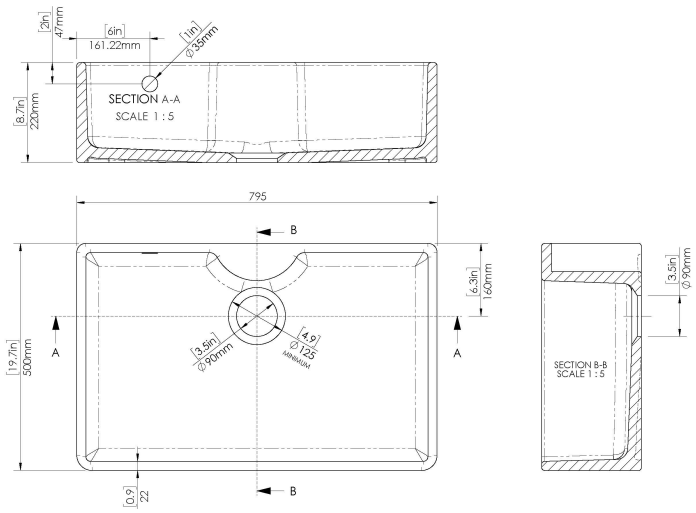

Product Dimensions	
Height (mm):	220
Width (mm):	795
Depth (mm):	500
Nett Weight (kg):	40.5
Packaging Dimensions	
Height (mm):	237
Width (mm):	814
Depth (mm):	507
Gross Weight (kg):	41
Packaging Data	
Box Colour:	Brown Cardboard Box
Box Qty:	1
Label Size:	100 x 50
Label Colour:	White Label
Label Qty:	2
Outer Box Dimensions (If Applicable)	
Height (mm):	
Width (mm):	
Depth (mm):	
Gross Weight (kg):	
Barcode:	5055275868515
Product Details	
Country of Origin:	Utd.Arab.Emir.
Fitting Instruction:	No
Certification: CE & UKCA:	WRAS: WRAS No:
Product Material:	
Fixing Supplied:	

Pans/Bidets: Trap Style: Includes Seat:

Seats: Seat Type: Material:
Function: Hinge Type:
Hinge Material:

Cisterns: Operating Type: Fittings:
Lever Type:

Basins: Tap Hole: Chain Stay Hole:
Template: Waste Type Req:
Overflow Inc: Overflow Cover:
Inner Bowl Depth (mm): 198