Sales Code: FJ311

Description: Series 2 Basin Taps

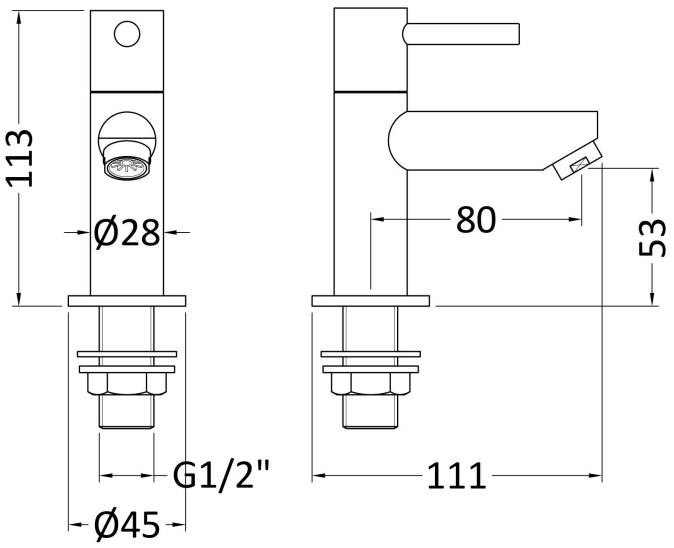

Product Dimensions	
Height (mm):	113
Width (mm):	45
Depth (mm):	111
Length (mm):	
Nett Weight (kg):	0.8
Packaging Dimensions	
Height (mm):	112
Width (mm):	45
Depth (mm):	114
Gross Weight (kg):	1
Packaging Data	
Box Colour:	White Cardboard Box
Box Qty:	0
Label Size:	0 x 0
Label Colour:	White Label
Label Qty:	0
Outer Box Dimensions (If Applicable)	
Height (mm):	300
Width (mm):	270
Depth (mm):	500
Length (mm):	
Gross Weight (kg):	14
Barcode:	5055146175216
Product Details	
Country of Origin:	China
Fitting Instruction:	Yes
Product Material:	Brass
Control Type:	Manual
Waste Included:	Waste Not Included
Waste Type:	Not Applicable
WRAS Approval: No	Approval No: N/A
Valve/Cartridge Type:	1/4 Turn Ceramic Disc
Colour/Finish:	Chrome
Mount Type:	Deck
Operating Pressure (bar):	0.2
Flow Rates: (Litres Per Min) 0.1 bar: 4	0.5 bar: 10 1 bar: 15 2 bar: 20 3 bar: 25
Pipe Size:	15 mm (1/2" Bsp)
Pipe Centres:	N/A