Sales Code: CLA899

Barcode: 5056462643441

Brand: nuie

Description: Ashwick Satin Green Round Wooden Soft Close Traditional Toilet Seat With Chrome Quick Release Hinge

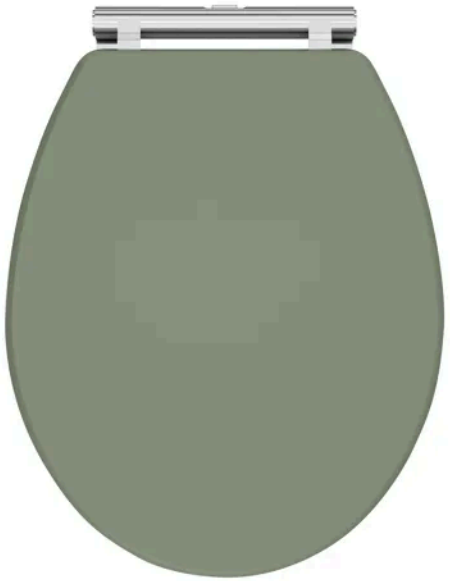

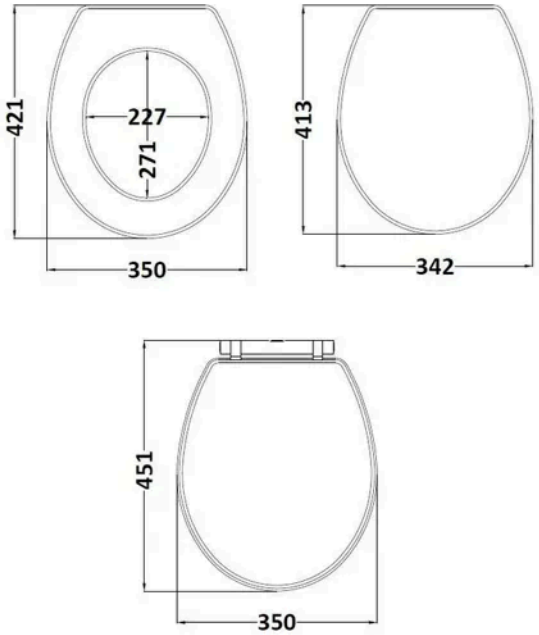

Product Dimensions

Product	60 x 350 x 451mm (H x W x D)
Packaged	70 x 395 x 475mm (H x W x D)
Outer Box	375mm (H)
Nett Weight	2.9 kg
Packaged Weight	3.4 kg

Packaging Details

Box Qty	1
Label Size (mm)	50 x 100
Label Colour	White
Label Qty	2.0000

Product Details

Country of Origin	China
Product Material	Mdf Vinyl,Zinc Alloy
Colour/Finish	Satin Green
Style	Traditional
Fixings Included	Yes
Hinge Centres (Max)	186 mm
Hinge Centres (Min)	150 mm
Toilet Seat Function	Soft Close
Toilet Seat Hinge Type	Quick Release
Toilet Seat Type	Round

© ROXOR Group