Sales Code: BU181AF32DWBG

Barcode: 5056817724160

Brand: nuie Kitchens

Description: nuie 795mm x 460mm x 220mm Fireclay White Double Bowl Butler Sink With Ledge, Wire Grid And Chopping Board



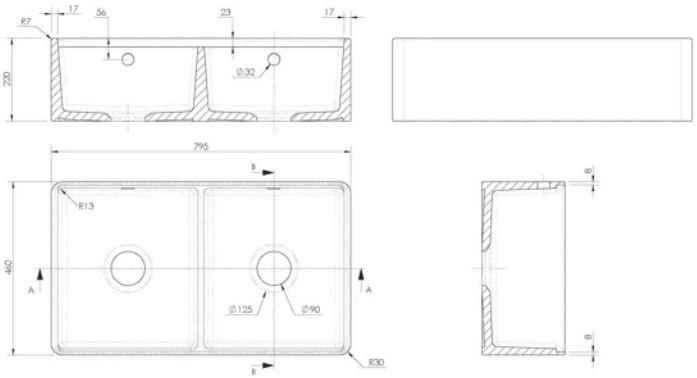

Product Dimensions

Product	220 x 795 x 460mm (H x W x D)
Packaged	230 x 825 x 480mm (H x W x D)
Nett Weight	47.83 kg
Packaged Weight	47.83 kg

Packaging Details

Box Qty	3

Product Details

Country of Origin	United Arab Emirates
Product Material	Fireclay
Colour/Finish	White
Style	Traditional
Fixings Included	No
Bottle Trap Included	No
Cupc Approval	Yes
Inner Bowl Depth	480 mm
Inner Bowl Height	230 mm
Inner Bowl Width	825 mm
No. Of Tapholes	No Tapholes
Number Of Bowls	2
Overflow Cover Included	Yes
Overflow Included	Yes
Sink Thickness	22 mm
Tap Included	No
Waste Included	No
Waste Size Required	90mm

© ROXOR Group

Sales Code: AE308 **Barcode:** 5056211884194 **Brand:** OEM **Description:** nuie Kitchen Sink Walnut Chopping Board



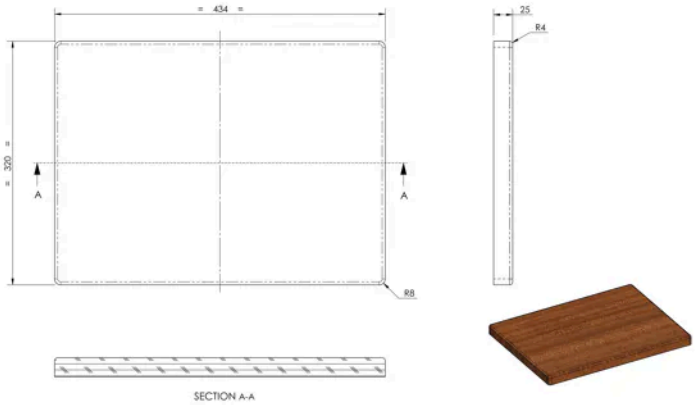

Product Dimensions

Product	25 x 320 x 320mm (H x W x D)
Packaged	25 x 320 x 434mm (H x W x D)
Nett Weight	2.03 kg
Packaged Weight	2.03 kg

Packaging Details

Box Qty	1

Product Details

Country of Origin	United Arab Emirates
Product Material	Walnut
Colour/Finish	Walnut
Style	Traditional

© ROXOR Group

Sales Code: AE318 **Barcode:** 5056211884507 **Brand:** Fireclay Sinks **Description:** nuie Stainless Steel Double Bowl Kitchen Sink Wire Grid Pack (Set of 2)



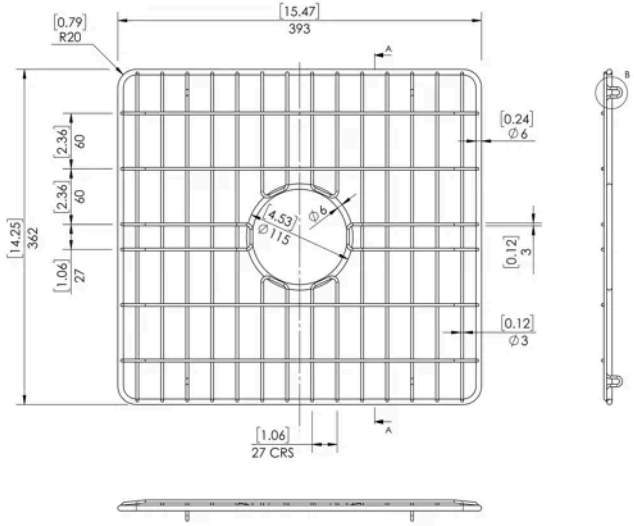

Product Dimensions

Product	8 x 393 x 362mm (H x W x D)
Packaged	373 x 838 x 8mm (H x W x D)
Nett Weight	0.9 kg
Packaged Weight	0.9 kg

Packaging Details

Box Qty	1

Product Details

Country of Origin	China
Product Material	Stainless Steel
Colour/Finish	Chrome
Style	Traditional

© ROXOR Group

Sales Code: BU181AF32D

Barcode: 5056678471364

Brand: nuie Kitchens

Description: nuie 795mm x 460mm x 220mm Fireclay White Double Bowl Butler Sink With Ledge



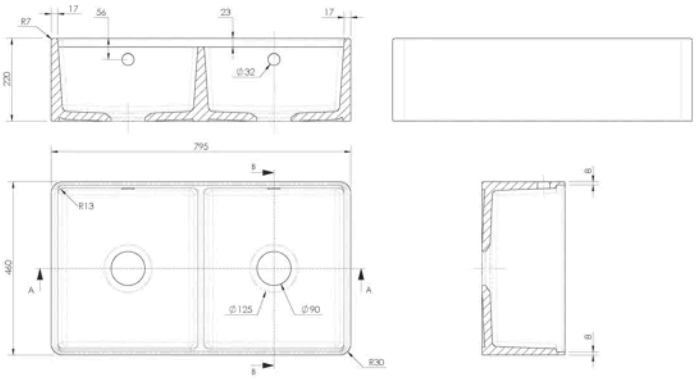

Product Dimensions

Product	220 x 795 x 460mm (H x W x D)
Packaged	230 x 825 x 480mm (H x W x D)
Nett Weight	44.4 kg
Packaged Weight	44.9 kg

Packaging Details

Box Qty	1
Label Colour	White

Product Details

Country of Origin	United Arab Emirates
Product Material	Fireclay
Colour/Finish	White
Style	Traditional
Fixings Included	No
Bottle Trap Included	No
Cupc Approval	Yes
Cupc Approval Number	311189
Inner Bowl Depth	480 mm
Inner Bowl Height	230 mm
Inner Bowl Width	825 mm
No. Of Tapholes	No Tapholes
Number Of Bowls	2
Overflow Cover Included	Yes
Overflow Included	Yes
Sink Thickness	22 mm
Tap Included	No
Waste Included	No
Waste Size Required	90mm

© ROXOR Group