Sales Code: CLA299

Barcode: 5056462643434

Brand: nuie

Description: Classique Satin Grey Round Wooden Soft Close Traditional Toilet Seat With Chrome Quick Release Hinge



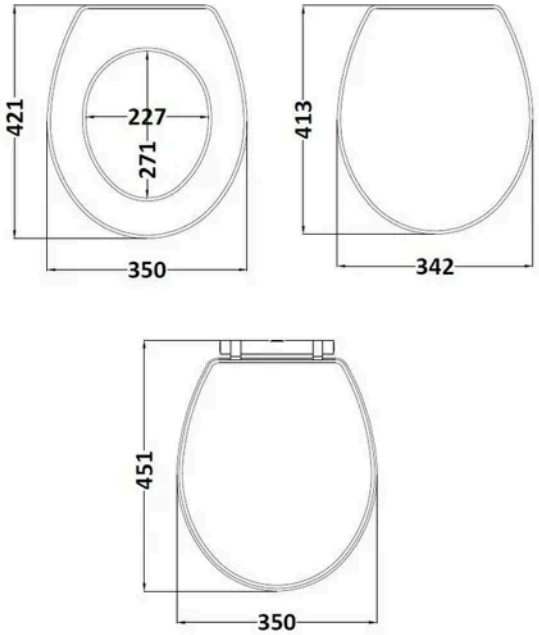

Product Dimensions

Product	60 x 350 x 451mm (H x W x D)
Packaged	70 x 395 x 475mm (H x W x D)
Outer Box	375mm (H)
Nett Weight	2.9 kg
Packaged Weight	3.4 kg

Packaging Details

Box Qty	1
Label Size (mm)	50 x 100
Label Colour	White
Label Qty	2.0000

Product Details

Country of Origin	China
Product Material	Mdf Vinyl,Zinc Alloy
Colour/Finish	Satin Grey
Style	Traditional
Fixings Included	Yes
Hinge Centres (Max)	186 mm
Hinge Centres (Min)	150 mm
Toilet Seat Function	Soft Close
Toilet Seat Hinge Type	Quick Release
Toilet Seat Type	Round

© ROXOR Group