RAK-PETIT - RAKPES3306G

Faucets

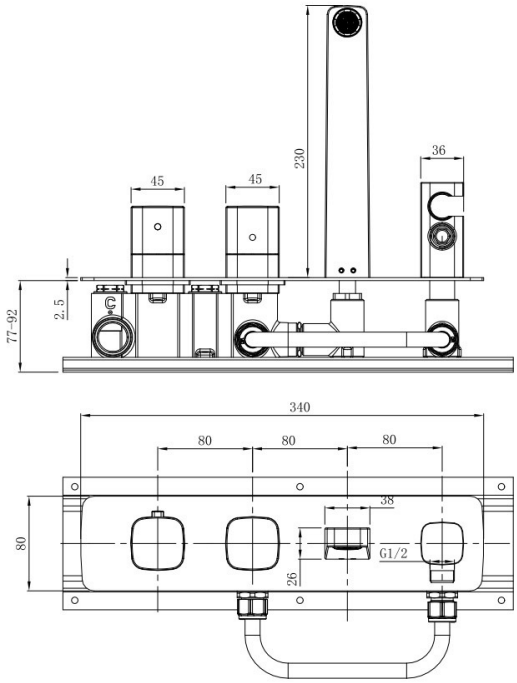

TECHNICAL SPECIFICATIONS

Suite:	RAK-Petit
Type:	RAK-Petit - RAKPES3306G
Dimensions:	80 x 340 mm
Pressure:	1 l
Chrome thickness:	0.00
Cartridge:	No
Tail:	NA
Handset wall brackets:	No
Color:	Brush Gold

Code	**Name**
RAKPES3306G	RAK-Petit Square Wall Mounted Thermostatic Bath Shower Mixer, 2 outlet in Brush Gold

Dimensions: All dimensions in mm. Tolerance of vitreous china & fireclay items: ± 5% for below 200mm and ± 3% for above 200mm; for all other items tolerance ± 1%. Note: Due to a continuing development program to improve design and performance, the manufacturer reserves all rights to vary specifications without prior information. Please note accessories are for photographic use only.