BDM315K/04

Contents of pack:
1off White low level pan - 455mm high
1off White 6 ltr cistern
1off White pvc flush pipe
1off Chrome spatula flushing lever handle
1off White Rangemoor heavy duty ring seat c/w s/s fixings
1off White wall hung basin 450 x 370mm
1pr Basin hangers
1off Chrome lever action spray mixer tap
1off Chrome 32mm flush grated waste
1off 32mm plastic bottle trap
5off White 600 x 35mm grab rails
1off White 825mm hinged support rail
1off White 400 x 250mm back rest rail with pad
(400 x 320mm inc. pad)

REQUIRED EXTRAS - Not Supplied

Mirror 400mm x 900mm
Toilet roll holder
Coat Hooks
Colostomy Shelf
Alarm Cord

Please note dimensions for the installation of the required extras can be found in;
The Building Regulations 2000 Approved Document M 2004 Edition
Page 56 Diagrams 19 and 20

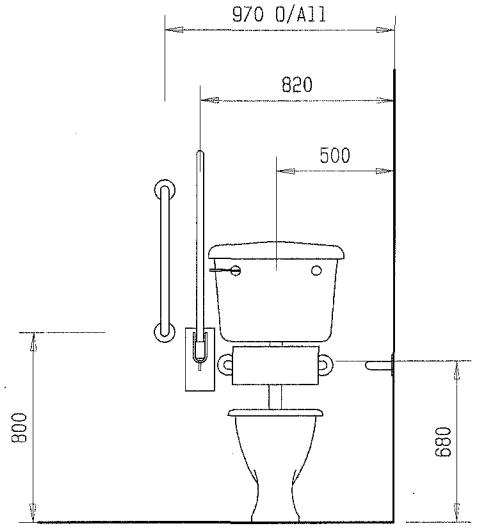

View on B-B

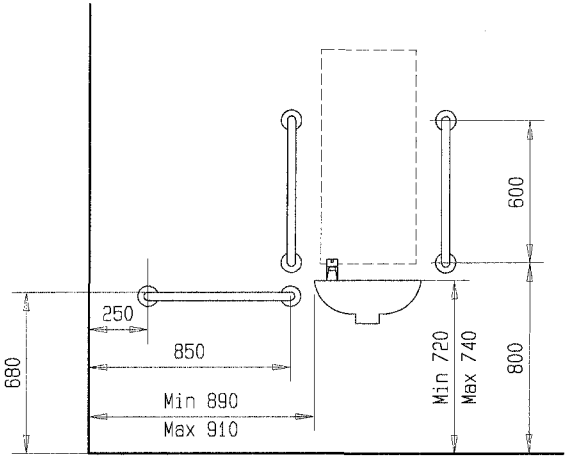

View on A-A

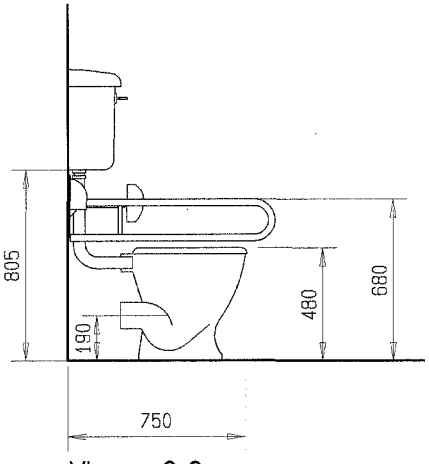

View on C-C

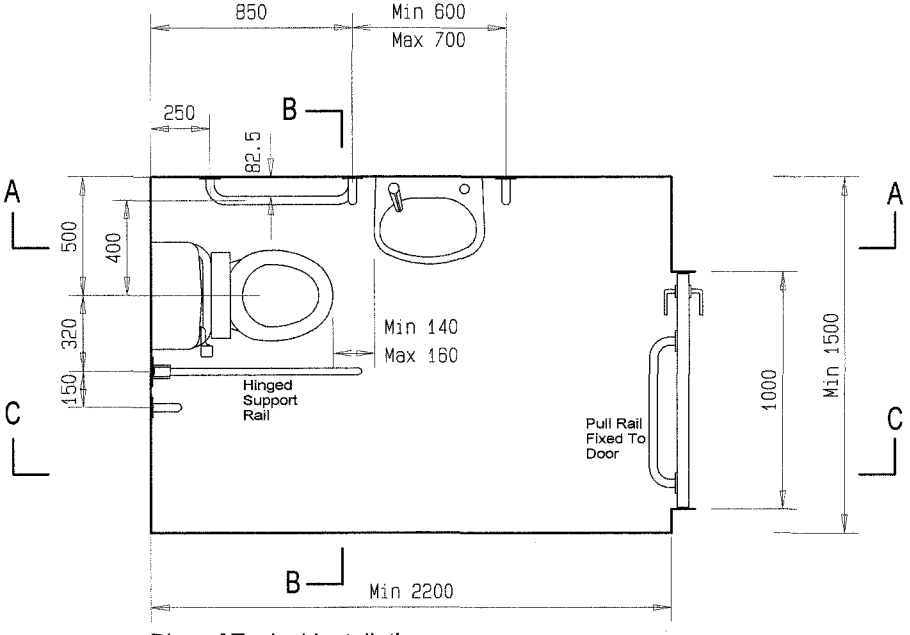

Plan of Typical Installation

.pdf copy

BARWOOD PRODUCTS Ltd
Design Department
Rembrandt & Broadway Works
All Saints Road, Burton on Trent
Staffordshire DE14 3LS
Tel: 01283 516526 Fax: 01283 517597

Dimensions in Millimeters

Do Not Scale — If in Doubt Ask!

Drawing Title	DOC M LANTAC APPROVAL Low Level - 2004
Material	
Finish	
Drawn By: A Barkas	Date: 20/01/04
Checked By:	Date:
Drawing No. BPL001017/1	Scale NTS