Layton

Description	Layton Washbasin, 2th, 60 cm
Code	5273L003-1093
Tap Hole Option	2 Tap Holes
Material	Ceramic
Compatible Products	6936L003-0156
VitrAclean	No
Dimensions	60
Colour	White

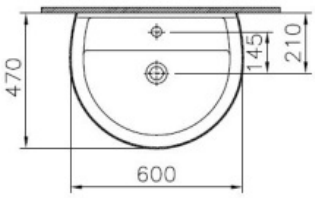

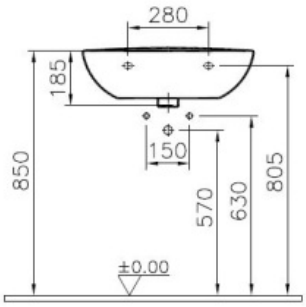

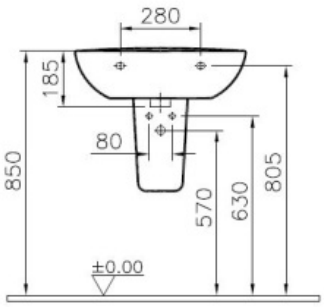

VitrA retains the right to change details about the products and technical specifications without prior notice.