Axis Matt Black - MD062

Tube: 30 x 40 D section & ∅ 22mm		Electrical element: 125 W	
		Output @50°C△T: 328 W 1119 BTUs	
Height: 800mm	Width: 505mm	Depth: 90 - 105mm	Pipe centres: 455mm

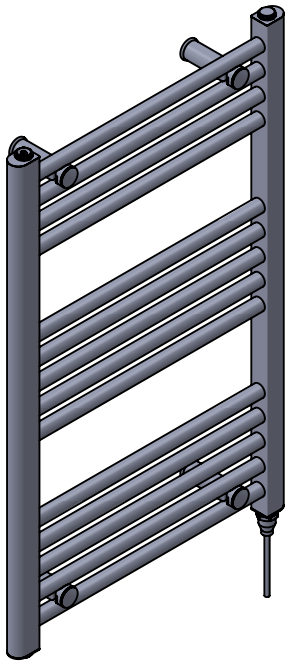

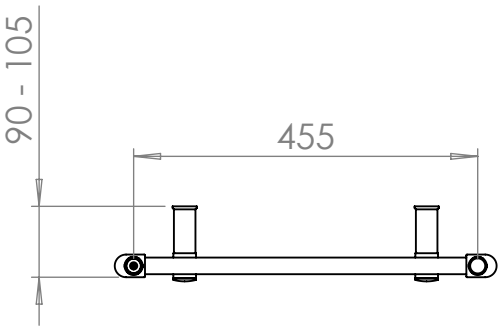

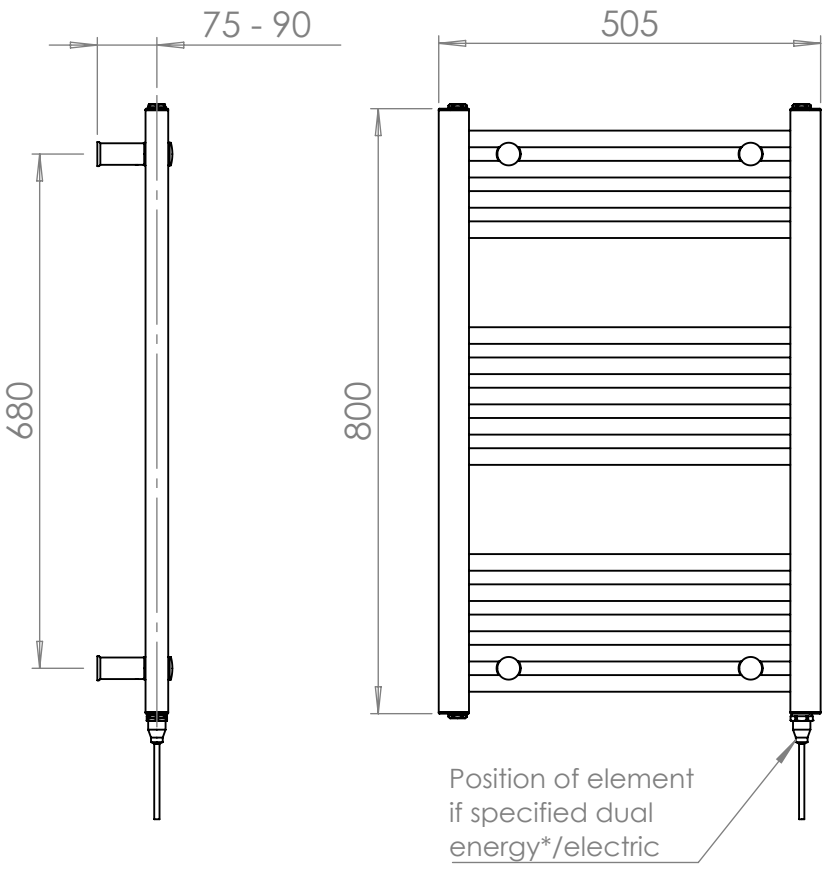

*Dual energy models require a conversion tee (AC003). Consult relevant drawing for details

All dimensions in millimetres	Manufactured from Mild Steel	
Revision: 001	Approved by:	Drawn on: 01/2024

VOGUE UK
TOWEL WARMERS & RADIATORS

www.vogueuk.co.uk
01902 387000
sales@vogueuk.co.uk

www.vogueuk.eu
01902 387035
exportsales@vogueuk.co.uk

www.vogueuk.com
T: 508 887 8771 F: 508 887 8774
info@vogueuk.com

Vogue UK Ltd. reserve the right to alter specifications without prior notice.
ALL MEASUREMENTS ARE NOMINAL DIMENSIONS ONLY, AND ARE NOT BINDING.

Scale 1:10