Axis Matt Black - MD062

	Tube: 30 x 40 D section & ∅ 22mm	Electrical element: 150 W
		Output @50°C△T: 384 W 1310 BTUs

Height: 800mm	Width: 605mm	Depth: 90 - 105mm	Pipe centres: 555mm

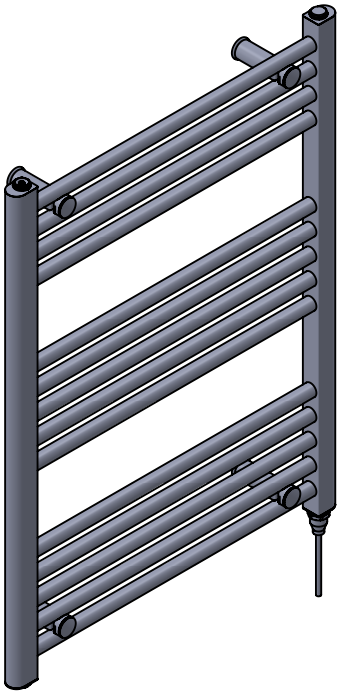

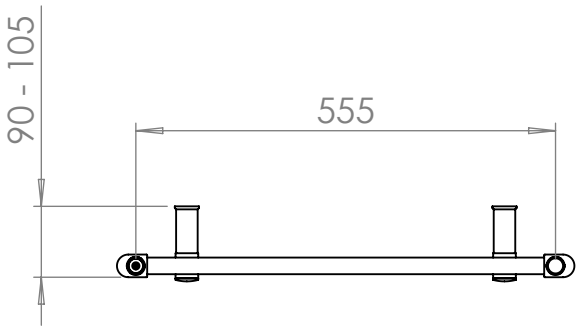

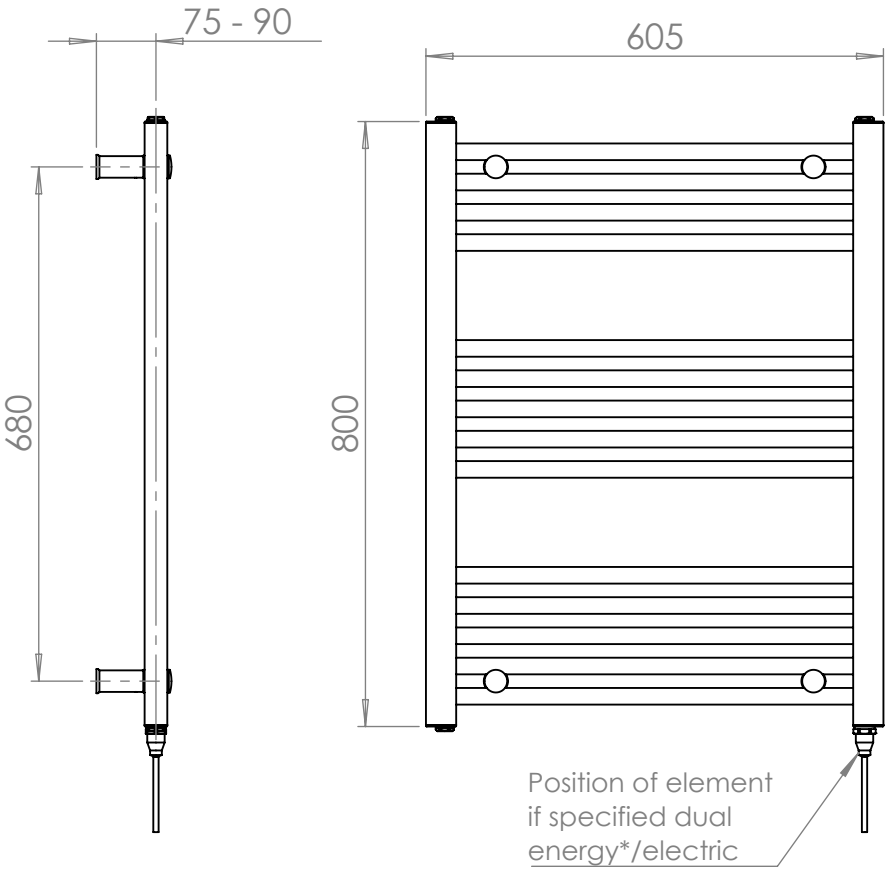

*Dual energy models require a conversion tee (AC003). Consult relevant drawing for details

VOGUE UK TOWEL WARMERS & RADIATORS	All dimensions in millimetres	Manufactured from Mild Steel	
	Revision: 001	Approved by:	Drawn on: 01/2024
	www.vogueuk.co.uk 01902 387000 sales@vogueuk.co.uk	www.vogueuk.eu 01902 387035 exportsales@vogueuk.co.uk	www.vogueuk.com T: 508 887 8771 F: 508 887 8774 info@vogueuk.com

Vogue UK Ltd. reserve the right to alter specifications without prior notice.
ALL MEASUREMENTS ARE NOMINAL DIMENSIONS ONLY, AND ARE NOT BINDING.

Scale 1:10